Statement of Justification and Burden of Proof in Support of AT&T's Application for Special Exception for a Proposed Rooftop Telecommunication Facility at 616 E Street NW, Washington, DC 20004

Applicants:	New Cingular Wireless PCS, LLC d/b/a AT&T Mobility 7150 Standard Drive Hanover, MD 21076
	PQ Controlling Entity, Inc. 616 E Street NW Washington, DC 20004
Representatives:	Gregory E. Rapisarda, Douglas A. Sampson, & Cynthia Giordano Saul Ewing Arnstein & Lehr, LLP 500 East Pratt Street, Suite 900 Baltimore, MD 21202-3171 (410) 332-8661 Greg.Rapisarda@saul.com Douglas.Sampson@saul.com Cynthia.Giordano@saul.com
	Samantha Twinam SmartLink LLC 1362 Mellon Rd., Suite 140 Hanover, MD 21076 (443) 624-6705 Samantha.Twinam@smartlinkgroup.com
Property Owner:	PQ Controlling Entity, Inc.
Parcel SSL:	PAR 01570026
Neighborhood:	Central/Penn Quarter
Zoning:	D-6-R
Use:	017 - Residential-Condominium (Vertical)
Ward:	2
ANC:	2C03
Size:	1.74 Acres (75,813 sq. feet)

Pursuant to Chapter 11 of the District of Columbia Municipal Regulations ("DCMR"), Y § 300, X § 900.1, and C § 1312, New Cingular Wireless PCS, LLC d/b/a AT&T Mobility ("AT&T") and PQ Controlling Entity, Inc. (together, "Applicants") by and through their agents/counsel, Saul Ewing Arnstein & Lehr, LLP and SmartLink LLC, submit this Statement of Justification and Burden of Proof in support of a special exception to construct a rooftop

Board of Zoning Adjustment
District of Columbia
CASE NO.20690
EXHIBIT NO.7

telecommunications facility (the "Rooftop Facility") at 616 E Street NW, Washington, DC 20004 (the "Property").

The Applicants respectfully request a determination by the Board of Zoning Adjustments that the proposed Rooftop Facility described herein is in substantial compliance with the DCMR and is authorized for a special exception. This document and attached Exhibits provide justification for AT&T's Rooftop Facility, and a summary of how and why this proposal conforms with the DCMR. This package, and additional or clarifying evidence to be presented at a public hearing, provide the legal and factual support needed to approve this special exception. Attached are the following exhibits:

EXHIBITS

Exhibit 1	Existing Coverage Maps With and Without MCI
Exhibit 2	Radio Frequency Justification Statement
Exhibit 3	Proposed Coverage Radio Frequency Propagation Map at 138'
Exhibit 4	Wireless Broadband Usage (AT&T) During COVID-19 Crisis
Exhibit 5	FirstNet Authority Information Sheets
Exhibit 6	Landowner Letter of Authorization
Exhibit 7	Site Plan in 8.5" x 11"
Exhibit 8	Photo Simulations of Rooftop Facility
Exhibit 9	AT&T Facilities and Other Telecommunication Poles Within Two Miles

I. AT&T GOALS AND NEED FOR IMPROVED WIRELESS SERVICES

AT&T is licensed by the Federal Communications Commission ("FCC") to provide wireless telecommunications services in the District of Columbia. AT&T has a significant need to replace existing wireless coverage that will be lost when AT&T's nearby telecommunications antennas are decommissioned in 2022. (*See* Existing Coverage Maps With and Without MCI attached as **Exhibit 1**). AT&T's proposed Facility will replace existing emergency and non-emergency wireless coverage in the Penn Quarter neighborhood. (*See* Radio Frequency Justification Statement attached as **Exhibit 2**). The area is currently provided with wireless service by rooftop antennas located on 600 E Street NW (a site named "MCI"). The antennas will need to be removed before the building is demolished, leaving a gap in AT&T's coverage. The Rooftop Facility will replace emergency and non-emergency wireless services along E St NW, D St NW, F ST NW, 7th ST NW, 8th ST NW and Indiana Ave NW. (*See* Ex. 2).

To replace the existing emergency and non-emergency wireless services, a new rooftop telecommunications facility is required. (*See* Proposed Coverage Radio Frequency Propagation Map at 138' attached as **Exhibit 3**). Rooftop antennas are permitted in the D-6-R District by right. *See* 11 DCMR C § 1302.2. However, due to a lack of rooftop space, the Facility will need to be located on top of a pair of existing penthouses. Because the antennas will be more than 12 feet above the existing rooftop, D.C. Staff indicated a special exception was required. Pursuant to DCMR C § 1304.2 and 1312, the Rooftop Facility meets the requirements for a special exception.

Approximately 59% of U.S. adults living in households have wireless-only telephone service, with no "landline" in their home.[1] More than 80% of 9-1-1 calls are made from mobile phones.[2] The COVID-19 crisis made it abundantly clear that wireless and broadband services were essential for millions of Americans who found themselves needing and relying on wireless coverage to live. Wireless coverage allows people to work from home, school from home, remotely visit doctors and therapists, worship online, and stay in touch, including visually, with family and friends.

COVID drove a significant increase in AT&T's voice calling, instant messaging, text messages, and video services. (*See* Wireless Broadband (AT&T) Usage During COVID-19 Crisis attached as **Exhibit 4**). The use of audio-conferencing solutions and large-scale webcast events each tripled, as business and schools adapted to the need for remote communications. (*See* Ex. 4). The use of audio, web, and video conferencing tools increased five times. (*See* Ex. 4). *S*ufficient and reliable wireless broadband coverage has never been more important and the need and demand is only growing.

The Rooftop Facility will allow AT&T to replace emergency and non-emergency wireless and broadband services. (*See* Ex. 3). Ultimately, this proposal will provide residents, commuters, visitors and front-line emergency service workers with reliable and better quality wireless services.

II. FIRST RESPONDER NETWORK AUTHORITY ("FIRSTNET")

The proposed site will expand and enhance FirstNet in Washington D.C. FirstNet is a nationwide high-speed broadband communications platform dedicated solely to first responders and emergency personnel. Following the recommendation of the 9/11 Commission, Congress established FirstNet to ensure a reliable public safety communication network across the country with dedicated bandwidth for use by first responders. (*See* FirstNet Authority Information Sheets attached as **Exhibit 5**). FirstNet is meant to, and does, prevent the type of massive wireless communication failures that occurred during the 9/11 terrorist attacks. The federal government chose AT&T, exclusively, to build out FirstNet nationally and ensure this emergency network is available wherever AT&T has sufficient coverage. During the COVID-19 pandemic, FirstNet provided significant support in helping the Washington's Office of Unified Communications maintain the 9-1-1 and 3-1-1 networks in the Nation's capital.

III. THE PROPERTY AND PROPOSED USE

The Applicants propose a new telecommunications facility with roof-mounted antennas, on a building located at 616 E Street NW, Washington, DC 20004. The Property's current use is as a condominium building: "017 - Residential-Condominium (Vertical)." The 12-story building sits on a 1.74 acre parcel. The building contains more than 200 condominium units. PQ

---

[1] CDC,NCHS, Stephen J. Blumberg and Julian V. Luke, *Wireless Substitution: Early Release of Estimates from the National Health Interview Survey*, January-June 2019, National Center for Health Statistics (May 2020), https://www.cdc.gov/nchs/data/nhis/earlyrelease/wireless202005-508.pdf.

[2] NENA, The 9-1-1 Association, https://www.nena.org/page/911Statistics (accessed May 4, 2021).

Controlling Entity, Inc. owns the Property and authorized AT&T and its agents to pursue a special exception. (*See* Letter of Authorization attached as **Exhibit 6**).

IV. THE PROPOSED ROOFTOP TELECOMMUNICATIONS FACILITY

The Rooftop Facility will include up to 12 antennas and will be concealed from surrounding properties by a pair of screened enclosures (190 and 219 square feet) located above the existing penthouses on the Property's roof on the north and south ends of the building. (*See* Site Plans attached as **Exhibit 7** at A-1, A-2, and A-3). The proposed enclosures are made of a special material that will screen the antennas but allow wireless signals to pass through. The enclosures will match the existing building and facade, virtually eliminating any visual impact on surrounding areas. (*See* Photo Simulations of Rooftop Facility attached as **Exhibit 8**).

The Rooftop Facility will replace and improve the wireless services lost when MCI is decommissioned. By co-locating on an existing building the Facility also eliminates the need for a new monopole or tower in the area, which would create a significant visual impact. The Rooftop Facility will allow AT&T to locate its antennas are 138 feet above ground level, providing replacement wireless services to the area to maintain AT&T's current coverage. (*See* Ex. 3).

The Rooftop Facility will not create any dust, noise, glare, light, or other effects that would create any impact on the area. The Rooftop Facility will be unmanned, free of public facilities, and only require occasional visits (about 1 visit per quarter) from an AT&T technician for routine inspections and maintenance. The Facility will have no impact on traffic.

V. THE SITE SELECTION PROCESS

When AT&T needs coverage, it looks for co-location opportunities to install a new facility. Co-location is always the first choice, given the speed to market and reduced capital costs, plus co-location is the first choice of the District and other regulatory bodies.

AT&T needs to fill a very specific coverage gap (*See* Ex. 1) caused by the demolition of 600 E Street NW requiring the decommissioning of AT&T's antennas currently located on that building. The loss of MCI will create a very specific gap in coverage along E St NW, D St NW, F ST NW, 7th ST NW, 8th ST NW and Indiana Ave NW in D (*See* Exs. 1 and 2).

To provide adequate replacement coverage, AT&T must locate the replacement facility within a quarter mile of 600 E. Street NW. The replacement coverage could not be achieved with existing AT&T facilities. (*See* AT&T Facilities and Other Poles Within Two Miles attached as **Exhibit 9**). There are limited buildings in the target area with a sufficient height to provide adequate replacement coverage. The Property was the only adequate building with a landlord willing to lease AT&T space for the Rooftop Facility. AT&T determined there are no towers or monopoles from other wireless providers, that AT&T is not already co-located on, within two miles. (*See* Ex. 9). In other words, there are no other telecommunications towers or monopoles in close enough proximity (a quarter mile) where AT&T could co-locate to provide replacement wireless coverage. (*See* Ex. 9).

The Rooftop Facility will replace the coverage lost in and around the Central/Penn Quarter Neighborhood by the decommissioned antennas at 600 E Street NW. The location and use of the Rooftop Facility is ideal, because it is at a height and location sufficient to meet AT&T's coverage needs, while replacing emergency and non-emergency wireless services, including FirstNet, in the area. The Rooftop Facility will blend into the existing building, with no adverse impact.

VI. PRE-APPLICATION MEETING AND OUTREACH TO ANC 2C

The Applicants participated in a pre-application meeting with DCRA at 10:00 a.m. on August 11, 2021 with Sara Estrada. The Applicants explained the proposal, the need for replacement coverage, and the restrictions limiting the Rooftop Facility location. DCRA agreed that the Rooftop Facility would require a special exception since it would be built on top of existing penthouses, not the rooftop. The proposed Rooftop Facility complies with all of the zoning requirements for a roof-mounted antenna, except the requirement that it not extend more than 12 feet above the existing rooftop. At DCRA's recommendation, the Applicants have concurrently submitted an application for a building permit to allow DCRA to begin reviewing that application.

AT&T will provide a copy of this filing to ANC 2C and the Office of Planning. AT&T will also contact the ANC 2C Commissioners and reach out to the community to provide notice and an opportunity to ask questions and provide feedback.

VII. THE APPLICATION MEETS THE REQUIREMENTS FOR SPECIAL EXCEPTION RELIEF UNDER 11 DCMR SUBTITLE X, § 901.1

The Board of Zoning Adjustment is authorized under § 8 of the Zoning Act, D.C. Official Code § 6-641.07(g)(2), to grant special exceptions where, in the judgment of the Board of Zoning Adjustment, the special exceptions: (a) will be in harmony with the general purpose and intent of the Zoning Regulations and Zoning Maps; (b) will not tend to affect adversely, the use of neighboring property in accordance with the Zoning Regulations and Zoning Maps; and (c) subject in specific cases to the special conditions specified in this title. *See* 11 DCMR Subtitle X, § 901.1.

A. Harmony with General Purpose and Intent of Regulations

The Rooftop Facility conforms to the general purpose and intent of the DCMR regulations, as set forth more fully below. The Rooftop Facility co-locates on an existing building, eliminating the need for a new tower or monopole and creates no adverse impacts on the area.

B. No Adverse Impact on Neighboring Properties

The Application can be approved by the Board with no adverse impact on neighboring properties. The Rooftop Facility is designed to blend in with the existing building, while creating just a 12 foot increase to the building's existing penthouses. Because the antennas are concealed in a stealth structure, there is no visual impact to the surrounding properties. (*See* Ex. 8, Photo Simulations). The Rooftop Facility will not create any dust, noise, glare, light, or other effects that would create any impact on the area. The unmanned facility will not create any traffic impact. Therefore, there will be no adverse impact on neighboring properties.

VIII. ZONING RELIEF REQUESTED

11 DCMR, Subtitle C, Section 1304 sets forth the requirements for "Roof-Mounted Antennas" depicted in italics and addressed below:

1304.1 All roof-mounted antennas, except those regulated by Subtitle C § 1306 or exempted by Subtitle C § 1307, shall comply with the following conditions:

(a) Each part of an antenna shall be set back from each edge, excluding party walls, of the roof a minimum distance equal to its total mounted height above the roof;

- **Applicants' Response:** The antennas will be completely enclosed within the Rooftop Facility. Additionally, all antennas will be setback from the edges of the roof by more than 12 feet (the height of the rooftop Facility). The Rooftop Facility will have setbacks of: 31'11" to the south, 32'6" to the north, and approximately 20' to the east. (*See* Ex. 7, Site Plans at A-1).

(b) An antenna may not exceed a total mounted height of twelve feet (12 ft.) above the roof;

- **Applicants' Response:** The antennas will not exceed twelve feet (12 ft.) above the existing penthouses located on the rooftop of the Property. Because the penthouses are already above the rooftop, the Applicants are seeking a special exception to build the Rooftop Facility under 11 DCMR, Subtitle C§ 1312.

(c) Each antenna installation shall be located or screened such that its visibility from public spaces, navigable waterways, historic landmarks, and national monuments is minimized to the greatest practical extent;

- **Applicants' Response:** The antennas will be completely screened inside structures designed to blend in with the existing building. (*See* Ex. 8, Photo Simulations).

(d) An antenna shall be constructed of materials and colors that blend with the surroundings to the greatest practical extent;

- **Applicants' Response:** The antennas will be completely screened inside structures designed to blend in with the existing building. (*See* Ex. 8, Photo Simulations).

(e) Antennas mounted on roofs with outdoor recreation space shall be secured from unauthorized access for a minimum distance of ten feet (10 ft.), by a fence or screen at least five feet (5 ft.) in height; and

- **Applicants' Response:** The antennas will be completely screened inside secure structures. By locating the Rooftop Facility on top of existing penthouses, above any recreation areas on the rooftop, there will be no public access to the Rooftop Facility.

(f) Any related equipment cabinet or shelter that is not internal to the building or penthouse shall be:

(1) Constructed of materials and colors that blend with the building or penthouses; and

(2) Located to reduce its visibility from public space to the greatest practical extent.

- **Applicants' Response:** The antennas will be completely screened inside structures designed to blend in with the existing building. (*See* Ex. 8, Photo Simulations). Additionally, the Rooftop Facility is setback from the roof edges, which will eliminate visibility from ground level.

1304.2 A proposed roof-mounted antenna that does not comply with the above requirements may be permitted through the special exception process set forth in Subtitle C§ 1312

- **Applicants' Response:** Because the Rooftop Facility does not comply with § 1304.1(b), the Applicants are seeking a special exception as set forth below.

1312.1 An application for special exception approval shall include the following written and graphic documentation:

(a) A map of area to be served by the new antenna;

- **Applicants' Response:** A map of the proposed coverage with the Rooftop Facility is provided. (*See* Ex. 3).

(b) A map and explanation of the area being inadequately served that necessitates installation of the proposed antenna;

- **Applicants' Response:** Wireless coverage will be diminished when the building at 600 E Street NW is demolished and AT&T's antennas will be decommissioned. (*See* Ex. 1). A map of the proposed coverage with the Rooftop Facility is provided. (*See* Ex. 3).

(c) A map indicating the location of any other antennas and related facility sites providing service by the applicant, and any antenna tower or monopole of any provider, within a two (2) mile radius, including public space, of the proposed antenna site, with identified heights above grade;

- **Applicants' Response:** The Applicants have provided maps of other AT&T facilities within two miles and any other tower or monopole within two miles. (*See* Ex. 9).

(d) A site, and roof plan if applicable, showing all structures and antennas on site;

- **Applicants' Response:** A site plan is attached. (*See* Ex. 7).

(e) Elevation drawings of the structure and proposed antennas from all four (4) directions;

- **Applicants' Response:** A site plan is attached. (*See* Ex. 7 at A-2 and A-3).

(f) A picture of the proposed antenna;

- **Applicants' Response:** Photo Simulations of the Rooftop Facility are attached. (*See* Ex. 8).

(g) The total mounted height of the antenna relative to the tops of surrounding trees as they presently exist within one-quarter mile (.25 mi.) of the proposed location; and

- **Applicants' Response:** AT&T's antennas will be located at an above-ground height of 138 feet. The area is heavily developed with commercial and residential buildings, with few mature trees. The closest substantial trees are located in Judiciary Square two-tenths of a mile to the east.

(h) Other information as may be necessary for impact assessment of the antenna.

- **Applicants' Response:** The Rooftop Facility is the least intrusive means to provide replacement coverage, including FirstNet, for the gap created by the loss of the MCI site. Because the facility is replacing a nearby rooftop facility there will be negligible impact on the surrounding neighborhood, and the proposal provides the least intrusive means to provide replacement coverage (as opposed to a new monopole). The Applicants will provide any additional information requested by this honorable Board.

1312.2 In addition to any other conditions deemed necessary to mitigate potential adverse impacts, the Board of Zoning Adjustment may impose conditions pertaining to screening, buffering, lighting, or other matter necessary to protect adjacent and nearby property and may require the removal of any on-site non-conforming, inoperable, or unauthorized antenna.

- **Applicants' Response:** This application complies with all relevant provisions of the DCMR and provides screening that will significantly reduce or eliminate any adverse effects to nearby properties. The Applicants respectfully request that the Board of Zoning Adjustment grant this application.

IX. ANTICIPATED WITNESS TESTIMONY

Should the Board of Zoning Adjustments require witness testimony at a future public hearing to clarify this application, AT&T anticipates the below witnesses may testify:

Samantha Twinam, SmartLink LLC

Ms. Twinam works in site acquisition and real estate management on behalf of AT&T. Ms. Twinam would testify about AT&T's search for an available location to replace the coverage lost when 600 E Street NW is demolished and AT&T's rooftop antennas are decommissioned. Ms. Twinam would testify that AT&T was required to search for sites within a quarter of a mile to provide adequate replacement coverage for the antennas to be decommissioned. The Property was the only viable candidate in the necessary location, with a willing landlord, and space on the roof to lease to AT&T. There were no viable options to place a roof-top antenna on a different roof without the need for the special exception requested here. Ms. Twinam will generally testify

that the information set forth in this application is complete and accurate to the best of her information, knowledge and belief. Ms. Twinam is also familiar with relevant sections from the zoning code and special exception requirements and, more specifically, how the proposed Rooftop Facility can meet or exceed each of the requirements.

Gaurav Behl, AT&T Radio Frequency Engineer

Mr. Behl works as a radio frequency engineer and has significant experience in RF emissions. Mr. Behl would testify that the radio frequency maps showing the existing AT&T coverage and proposed coverage are complete and accurate depictions. He is expected to testify that the Rooftop Facility will provide adequate replacement coverage for the AT&T antennas that will be decommissioned when 600 E Street NW is demolished. Mr. Behl will also testify that AT&T is required to locate replacement antennas within a quarter mile of 600 E Street NW in order to provide replacement coverage. Mr. Behl is also familiar with sections from the zoning code and special exception requirements relating to his field of expertise and, more specifically, how the proposed Rooftop Facility can meet or exceed each of the relevant requirements.

Camille F. Shabab, Entrex Communications Services, Inc.

Mr. Shabab is a professional engineer who is licensed to practice in the District of Columbia. Mr. Shabab prepared, signed and sealed the site plans attached as Exhibit 7. He would testify that the site plans are an accurate and complete depiction of the proposed project to the best of his information, knowledge and belief. He would discuss the engineering and design of the Rooftop Facility, the stealth structures that blend into the existing building, and the accompanying equipment. Mr. Shabab is also familiar with sections from the zoning code and special exception requirements related to his fields of expertise and, more specifically, how the proposed Rooftop Facility can meet or exceed each of the requirements.

Douglas A. Sampson, Saul Ewing Arnstein & Lehr LLP

Mr. Sampson is an attorney who practices in the area of zoning and land use. He will testify that he has reviewed the DCMR, and that AT&T's application is in substantial compliance with all relevant regulations and provisions. Mr. Sampson will testify that the information set forth in this application is complete and accurate to the best of his information, knowledge and belief.

X. CONCLUSION

For the reasons stated above, the requested relief meets the applicable standards of DCMR and can be granted without substantially impairing the intent, purpose, and integrity of the Regulations. The Applicant therefore requests that the Board approve this application.

Respectfully Submitted,

SAUL EWING LLP

Cynthia A. Giordano
1919 Pennsylvania Avenue, NW
Suite 550
Washington, DC 20006
(202) 333-8800
Cynthia.Giordano@saul.com

Gregory E. Rapisarda
Douglas A. Sampson
500 E. Pratt Street
Baltimore, MD 21202
(410) 332-8661
Greg.rapisarda@saul.com
Douglas.Sampson@saul.com

cc: Jennifer Steingasser, Deputy Director, Office of Planning
Gigi Nelson, Commissioner of ANC 2C03

CERTIFICATE OF SERVICE

I HEREBY CERTIFY that on this 24th day of November 2021, a copy of the foregoing application materials were sent via first class and electronic mail to:

Jennifer Steingasser, Deputy Director, Office of Planning
DC Office of Planning
1100 4th Street SW, Suite 650
Washington, D.C 20024
Jennifer.steingasser@dc.gov

Karen Thomas, Review Specialist
DC Office of Planning
1100 4th Street SW, Suite 650
Washington, D.C 20024
Karen.thomas@dc.gov

Gigi Nelson, ANC 2C03 Commissioner
631 D Street, NW
Washington, DC 20004
Phone: (202) 838-7260
2C03@anc.dc.gov

Douglas A. Sampson

EXHIBIT 1

Existing AT&T Coverage with MCI

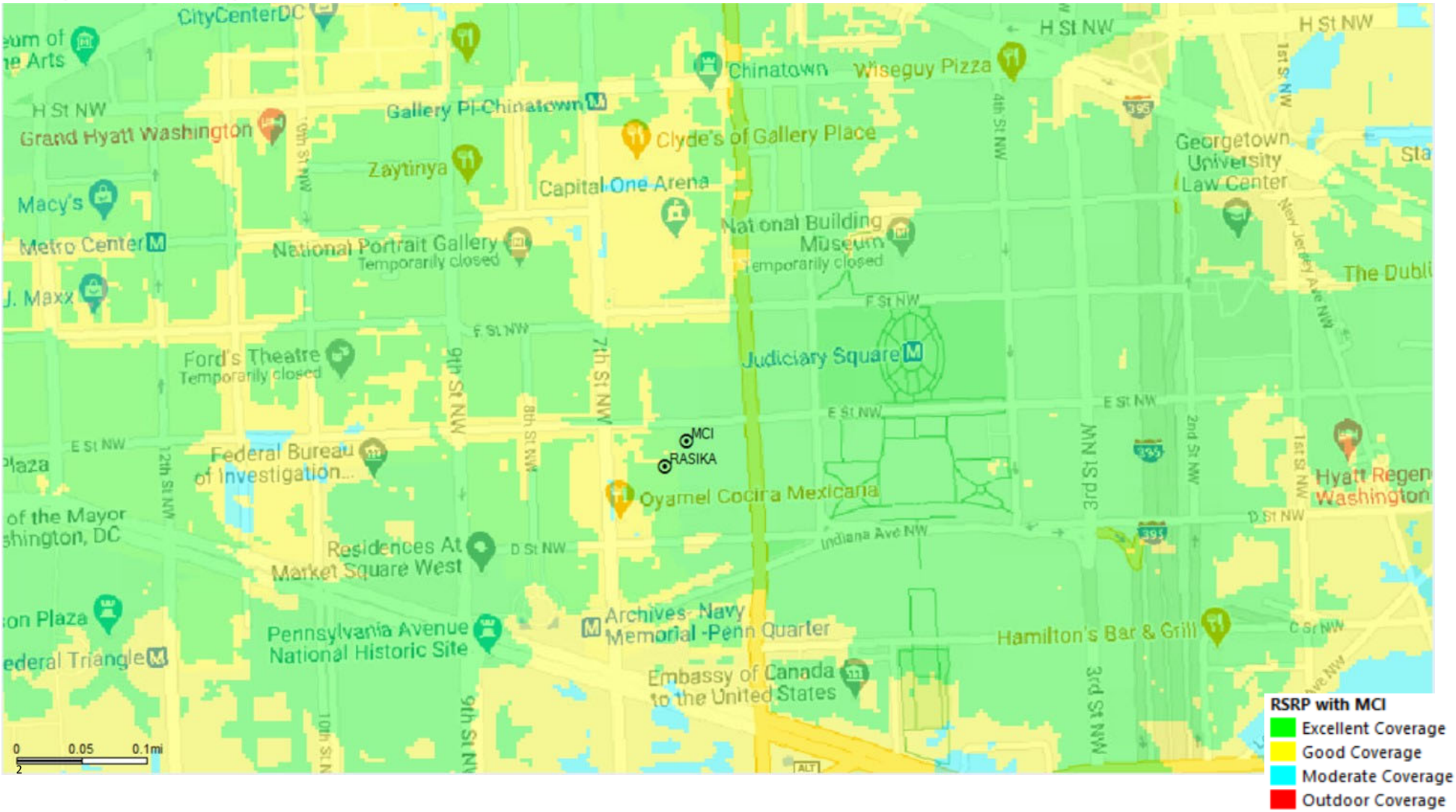

Proposed AT&T Coverage without MCI

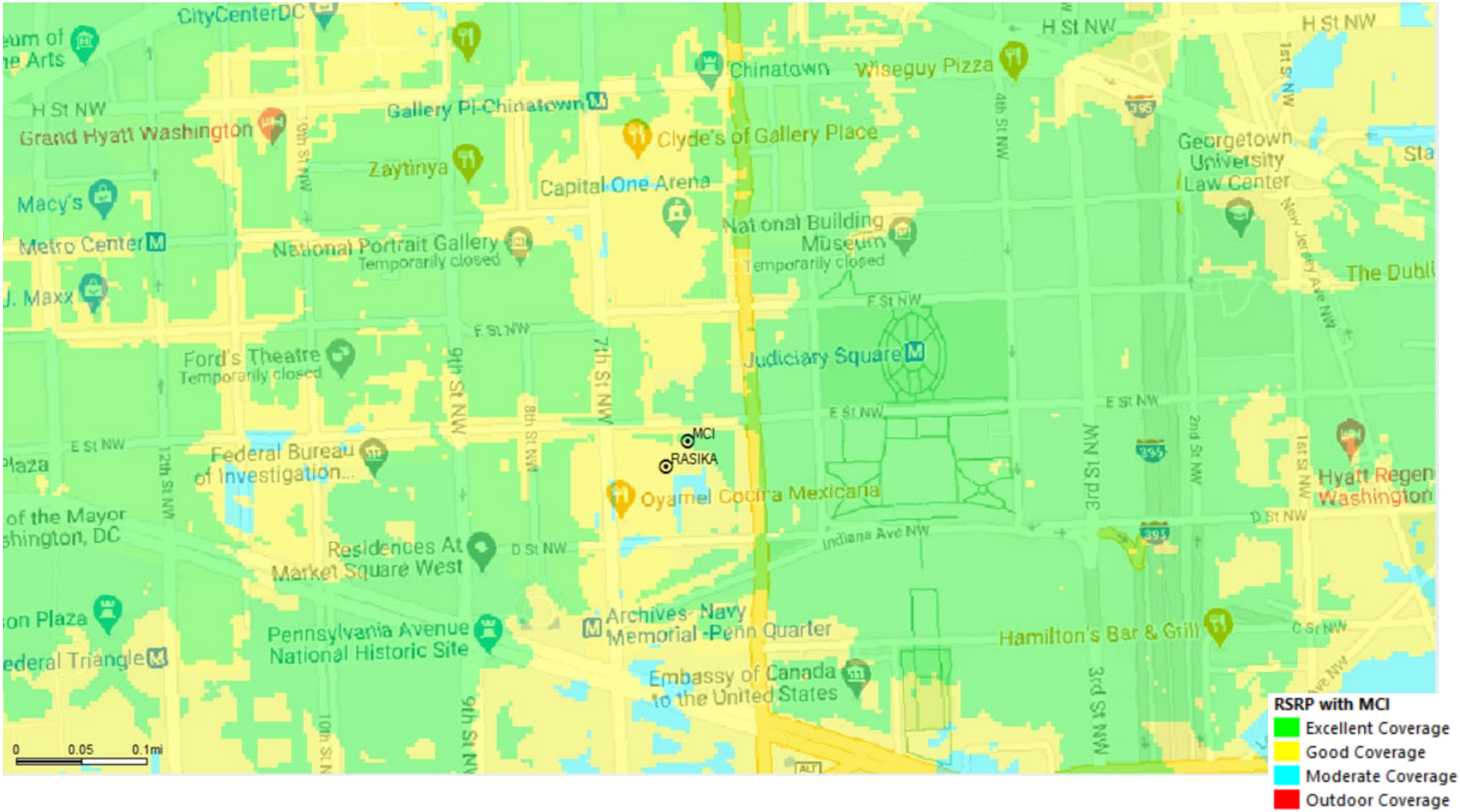

EXHIBIT 2

RF Justification

Site Name: Rasika

Address: 616 East Street Northwest, Washington DC 20004 (District of Columbia)

The main objective of this site is to provide AT&T coverage along E St NW, D St NW, F ST NW, 7th ST NW, 8th ST NW and Indiana Ave NW in DC.

The addition of this site will improve coverage including in-building coverage inside commercial buildings along above streets. Currently, these areas are covered by Existing AT&T Site MCI which is slated for Decomm

The Proposed site will also ensure overlap coverage, handoffs and off-load traffic among existing AT&T Sites DC Court, GAO Building, Newseum and Market Square.

Commuters and residents will experience better quality of voice and data services from AT&T with the addition of Rasika site.

AT&T will collocate on an existing Rooftop at 138' Rad Center on this site.

.

Prepared by:

Gaurav Behl
RF Engineer
gb943a@att.com

Approved by:

Sandeep Gupta
RF Design Manager

AT&T Mobility
7150 Standard Drive
Hanover, MD
21076

EXHIBIT 3

Proposed AT&T Coverage with Rasika

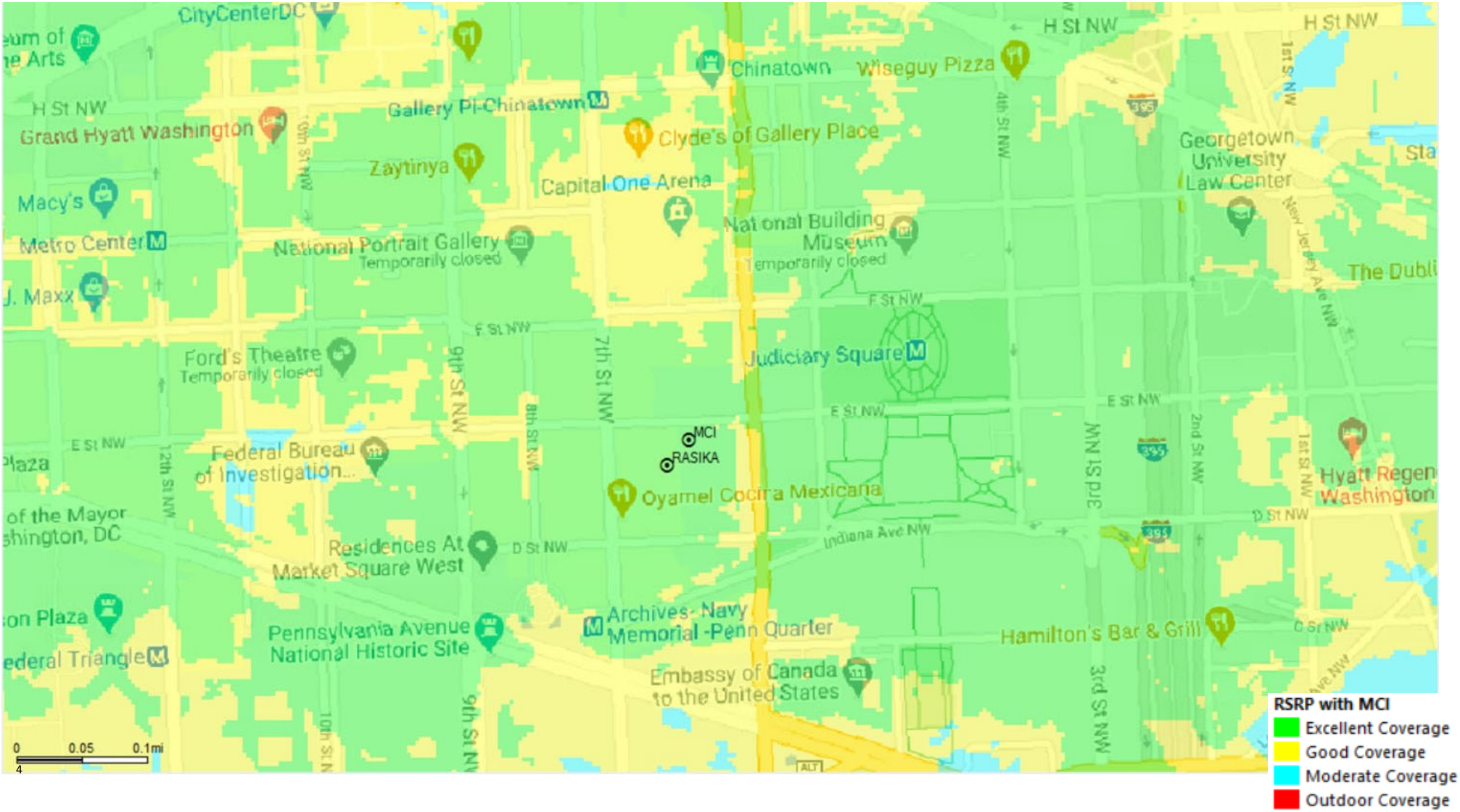

EXHIBIT 4

AT&T Remains Focused on Keeping You Connected

As people are doing their best to self-isolate, AT&T's network is keeping people connected.

In the last three weeks of March, here's what we've seen on our mobile network alone:

VOICE CALLS	INSTANT MESSAGING	TEXT MESSAGING	VIDEO
↑ +33%	↑ +63%	↑ +41%	↑ +4% (also accounts for over half of all mobility traffic)

How businesses and schools are communicating has steadily increased the usage of conferencing tools, which are at an all-time high. Here's what we've seen over the last few weeks of March:

AT&T'S GLOBAL AUDIO-CONFERENCING SOLUTION	MORE MINUTESAUDIO, WEB AND VIDEO CONFERENCING TOOLS	LARGE-SCALE WEBCAST EVENTS
↑ +200%	↑ +400%	↑ +200%

Despite these dramatic shifts in traffic patterns, our network continues to perform well. AT&T invested more than $135 billion in our wireless and wireline networks over the past 5 years (2015-2019).[1] During this time, we invested more in the U.S. than any other public company, and it has paid off. We're able to respond rapidly to surges in traffic and help meet the quickly evolving needs of our customers. When we see stress, we are proactively augmenting where needed.

Additionally, we're actively using AI to:

- **Reset our 4G and 5G cell sites:** When cell site issues are detected, we have an automated process to collect data, analyze and reset the site. AI is also helping us conserve energy, by "waking up" some cells more frequently as traffic increases, while others, such as in office parks and buildings that are less occupied now, go to sleep more.
- **Detect customer equipment issues:** AI is also helping us remotely troubleshoot and diagnose problems with customer equipment, by identifying the cause or even proactively identifying a potential issue before it occurs.
- **Avoid network traffic congestion:** We've expedited deployments of new AI capabilities in certain markets that will allow us to balance the traffic load within a sector and across sectors to help avoid overloading specific cells and improve the experience.

1 includes U.S. and international capital investment and acquisitions of wireless operations and spectrum

© 2020 AT&T Intellectual Property. All rights reserved. AT&T, the Globe logo and other marks are trademarks and service marks of AT&T Intellectual Property and/or AT&T affiliated companies.

AT&T

And of course, we're doing other things to support more people working and learning from home, such as adding additional spectrum (capacity) to cell sites to improve customers' experience.

The U.S.'s wireless performance is due in no small measure to its longstanding recognition that a light touch approach to regulation promotes competition, innovation and investment. It's one that often recognizes new technologies are transforming our societies and economies, and technology changes much faster than regulation, enabling the U.S. to be a global leader in technology.

Consistent with FCC Chairman Pai's "Keep Americans Connected Pledge" and concerns raised by members of Congress, which we share, AT&T is also proud to support our customers by pledging that, for 60 days, we will:

1. Not terminate the service of any wireless, home phone or broadband residential or small business customer because of their inability to pay their bill due to disruptions caused by the coronavirus pandemic.
2. Waive* any late payment fees that any wireless, home phone or broadband residential or small business customer may incur because of economic hardship related to the coronavirus pandemic.
3. Waive domestic wireless plan overage charges for data, voice or text for residential or small business wireless customers incurred because of economic hardship related to the coronavirus pandemic.
4. Keep our public Wi-Fi hotspots open for any American who needs them.

To provide further relief and support, AT&T announced:

- **Unlimited AT&T Home Internet** – All AT&T consumer home internet wireline customers, as well as Fixed Wireless Internet, can use unlimited internet data.
- **More Mobile Hotspot Data** – We are automatically increasing mobile hotspot data by 15GB a month for each line on an unlimited plan that currently includes a monthly tethering allotment. That means if you're on AT&T Unlimited Elite you'll automatically get 45GB a month of tethering per line.
- **Added Prepaid Offers** – A limited time offer of $15 for 2GB of data with unlimited talk and text will be available to new and existing customers with no activation fee for AT&T PREPAID and Cricket customers. We're also adding 10GB per month of additional data.
- **Helping You Learn Remotely** – We're also offering schools a way to save on unlimited wireless broadband connectivity for students. Through May 22nd, qualified schools activating new lines on qualified data-only plans for school-issued tablets, 4G LTE-enabled laptops and hotspot devices will get the wireless data service at no cost for 60 days.

We're committed to being there when our customers and colleagues need us most. Visit AT&T's dedicated COVID-19 website for additional details and the latest updates.

© 2020 AT&T Intellectual Property. All rights reserved. AT&T, the Globe logo and other marks are trademarks and service marks of AT&T Intellectual Property and/or AT&T affiliated companies.

AT&T

EXHIBIT 5

Connecting the frontlines during COVID-19 response

How FirstNet supports public safety during emergencies

FirstNet: America's Public Safety Network

The Department of Commerce's **First Responder Network Authority** (FirstNet Authority) has delivered a nationwide broadband network to America's first responders, helping them communicate, save lives and protect our communities. The network provides first responders with their own always-on, 24/7, 365 "fast lane" for voice and data communications.

SUPPORTING PUBLIC SAFETY RESPONSE TO COVID-19

FirstNet is helping communities respond to COVID-19 by supporting public safety communications across the country. Healthcare workers and first responders are using the FirstNet network to communicate and coordinate operations at COVID-19 testing centers, field hospitals, and incident command posts. The network allows them to maintain reliable communications when and where they need it most – even during surge situations where commercial networks can become congested – and interoperate with other first responders across federal, state, and local agencies. The network's fleet of dedicated deployable assets – more than 70 portable cell sites available 24/7 at no additional charge – has also been called upon to help public safety agencies.

- ✓ More than **50 FirstNet mobile cell sites have been deployed for COVID-19 related emergencies**.
- ✓ There are **more than 13,000 agencies using more than 1.5 million connections** on FirstNet (as of April 2020).
- ✓ The response to COVID-19 led to increased network use. First responders **consumed more than 2 times as much data** as AT&T commercial customers from January to May 2020. This underscores the need and importance of having a network specifically built for public safety's demanding and lifesaving mission.

EMERGENCY OPERATIONS CENTERS AND HEALTHCARE SITES

- FirstNet is working closely with federal, state, local and tribal emergency operations centers (EOCs) to make sure the network addresses first responders' communication needs during COVID-19 response. **FirstNet is working with EOCs in every state and has deployed mobile cell site assets in states including Georgia, California, New York, and Connecticut.**
- FirstNet portable cell sites and other devices have been deployed at testing facilities to ensure reliable communications for when crowds arrive for testing. The nation's first **COVID-19 Dedicated Care Center in Boston** needed reliable communications fast to care for an influx of patients. Thousands of FirstNet Ready™ devices – including smartphones, MiFis and more – were delivered to help first responders test and treat patients.
- FirstNet provided connections for public safety and healthcare workers inside the **US Naval Ship Comfort** in New York harbor by providing kits to install FirstNet service on the ship, and a FirstNet cell tower on wheels was used to bolster emergency communications for workers at the **US Naval Ship Mercy** in Los Angeles.

CONNECTING RURAL AND TRIBAL LOCATIONS

- To prepare for and meet the demand of caring for COVID-19 patients in rural California, FirstNet supported emergency communications in **Tulare County**, where a remote, makeshift hospital was set up at the Porterville Developmental Center. There, a portable FirstNet cell site was used to provide extra network coverage and capacity for public safety and healthcare workers in and around this critical healthcare facility. "With this support, our first responders and healthcare personnel will have the priority connectivity they need, when they need it." – **Dennis Townsend, Tulare County (CA) Supervisor**
- The FirstNet Authority is actively working with tribal public safety agencies to support their unique communications needs and challenges for responding to COVID-19. FirstNet deployable assets have been deployed to multiple tribal areas to support communication needs where first responders need connectivity, including on the Navajo Nation. "We appreciate that FirstNet answered our call when we requested the deployable asset to provide critical connectivity for federal and tribal officials responding to the COVID-19 crisis." – **Chris Becenti, Executive Director, Navajo Nation Telecommunications Regulatory Commission Office**

KEEPING 9-1-1 DISPATCHERS CONNECTED

- Emergency Communications Centers are critical for an effective emergency response, taking calls for assistance from the public and directing first responders to emergencies. In the City of Alexandria, Virginia, hotspots and smartphones powered by the FirstNet network are enabling 9-1-1 dispatchers to take calls and handle Computer Aided Dispatch (CAD) operations from their homes and remote locations. "We didn't want to rely on people's home internet because we know they can lose connectivity. We know we won't lose connectivity with FirstNet." – **Renee Gordon, Director of Department of Emergency & Customer Communications (DECC), City of Alexandria, VA**

COORDINATING MULTI-AGENCY RESPONSE

- In Indiana, Strategic National Stockpile (SNS) medical supplies were received and distributed from a central location at Stout Field, Indiana Air National Guard Headquarters. Multiple state and local agencies came together to ensure that critical supplies reached local communities as quickly as possible. FirstNet provided seamless interoperability with the statewide radio system, which helped multi-agency communications and improved operations at Stout Field, Indiana Air National Guard Headquarters. "The Indiana State Department of Health team leading this effort carried either radios or cell phones – or both – and communication became quite difficult. We suggested they try FirstNet, and connected an existing LMR talkgroup to the FirstNet ePTT app. This solution really simplified and streamlined their communication process. They're now FirstNet believers." – **Kelly Dignin, Executive Director, Integrated Public Safety Commission**

FirstNet: Connecting and Protecting Communities

While COVID-19 has been front and center for all of public safety, agencies have had to respond to other emergencies and incidents, and FirstNet has been there to assist. The network covers more than 99% of the U.S. population, making rural coverage a top priority, and is the only nationwide, high-speed broadband network that is dedicated to America's first responders.

Rural and Remote America – FirstNet is bringing more connectivity and innovation to first responders operating in rural communities across the country. This includes adding rural coverage where it did not previously exist, such as the purpose-built FirstNet cell site on the Red Cliff Reservation in Wisconsin.

Telehealth – Health facilities are increasingly using telehealth applications to treat patients from a distance, and these applications can be data intensive and have a low tolerance for latency or jitter. FirstNet provides the bandwidth and capacity that enables video and photos to be used for telehealth purposes. The data prioritization on FirstNet gives first responders and health workers a network that will be there when they need it most.

Innovation – FirstNet is enabling a growing ecosystem of devices and apps for public safety personnel. More than 100 apps have been tested for additional security and reliability and are identified for public safety's use in the FirstNet App Catalog. Further, while consumers are using more apps to manage working from home and helping their children with distance learning, public safety agencies across the country are using the FirstNet App Catalog as they adjust and modify their response to COVID-19. In addition, the FirstNet Authority guides the future technology evolution of the network through its Roadmap and investments.

FirstNet™

10 WAYS FIRSTNET WILL HELP PUBLIC SAFETY SAVE LIVES AND SECURE COMMUNITIES

Across the country, public safety personnel bravely serve their communities every day, answering the call when emergencies strike and risking their lives to secure and protect others. FirstNet is developing the first nationwide public safety broadband network to provide them the advanced communication and collaboration technologies they need. Here are ten ways FirstNet will help public safety save lives and secure communities:

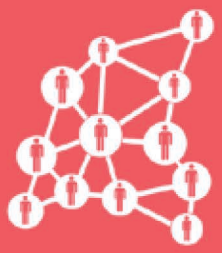

1. Improving communications through an interoperable network

Today, first responders rely on more than 10,000 separate, incompatible, and often proprietary radio networks to communicate with each other during emergencies. Sometimes it's hard, or even impossible, for public safety to communicate and work together to save lives. To help address this challenge, the FirstNet network will be a single, nationwide, interoperable LTE network dedicated to public safety communications.

2. Connecting responders in rural America

Emergencies don't happen only in highly populated areas – which is why reaching rural America is one of FirstNet's top priorities. FirstNet is addressing rural coverage needs in multiple ways to deploy the network in places where coverage may be difficult. High-power towers can cover more rural space with less total infrastructure, as can deployable and satellite solutions.

3. Enhancing situational awareness in emergencies

FirstNet will carry high-speed data, location information, images, and video that can mean all the difference when seconds count. Just as smartphones have created a new era of real-time information and connectedness for individuals, the FirstNet network, devices, and applications will enable the awareness and collaboration the public safety community needs to save lives.

4. Giving public safety true priority

During emergencies, public safety needs to be able to communicate without interruption – lives depend on it. It is vital that our nation's law enforcement officers, firefighters, paramedics, and other responders have true priority for their daily and emergency communications needs. This is why FirstNet is deploying a wireless broadband network dedicated to public safety.

5. Offering vital capacity for planned events, large crowds

Emergencies aren't the only times when public safety needs capacity to communicate and send data. Planned events – like concerts, festivals, and sporting events – draw crowds to a single location, making it difficult for public safety to get the robust network capacity they need to do their jobs. That's where FirstNet will help, by providing needed bandwidth to coordinate public safety resources and respond to any incidents.

info@firstnet.gov | www.firstnet.gov | 571-665-6100

(revised October 2016)

FirstNet™

10 WAYS FIRSTNET WILL HELP PUBLIC SAFETY SAVE LIVES AND SECURE COMMUNITIES

6. Delivering actionable data via innovative apps, devices

Public safety needs data communications in the field and innovative public safety communications technology. That's why the FirstNet network is designed to deliver applications, devices, and services tailored to the needs of public safety. FirstNet will be a resilient, reliable network, enabling everything from smartphones to laptops, tablets, dongles, and specialty devices to work when public safety needs them the most.

7. Providing reliability and security when disaster strikes

First responders in every state face the challenge of preparing for and responding to natural disasters. Having reliable communications is an integral component of any plan or response effort. FirstNet can help public safety save lives and secure communities by ensuring a reliable communication system is in place to assist public safety and rescue crews before, during, and after a natural disaster.

8. Ensuring coordinated response to man-made disasters

In the face of man-made attacks or natural disasters, the ability to communicate is essential to first responders. Incident commanders need to convey vital data to every first responder–fast. They need to know if resources from neighboring jurisdictions can be available. FirstNet is working to deliver a broadband network with interoperability built-in from day one to enhance public safety's ability to protect and serve.

9. Driving innovation in life-saving, public safety communications technology

With the potential for millions of users on a single LTE network, FirstNet hopes to foster creation of a new ecosystem in which entities compete to deliver applications and other services through the FirstNet network. The nationwide scale brought by FirstNet will maximize the value of every public safety dollar spent by allowing public safety end-users to take advantage of an increasingly competitive marketplace.

10. The network first responders need to keep our communities safe

FirstNet is taking a "for public safety, by public safety" approach to planning and deploying the network. Through its consultation and outreach program, FirstNet has worked hand-in-hand with the public safety community to understand the capacity, coverage, service, and other public-safety-grade features they need to communicate and use 21st-century tools on the job.

info@firstnet.gov | www.firstnet.gov | 571-665-6100

(revised October 2016)

EXHIBIT 6

November 8, 2021

Washington DC Office of Zoning
441 4th Street, NW, Suite 200S,
Washington, DC 20001

re: Letter of Authorization by Owner

To Whom it May Concern:

I am the authorized representative for PQ Controlling Entity, Inc, the owner of real property located at 616 E Street NW, Washington, DC 20004: (the "Property").

This letter authorizes AT&T, the law firm of Saul Ewing Arnstein & Lehr LLP, and/or Smartlink LLC, and any and all of their agents and representatives, including but not limited to Gregory Rapisarda, Esquire, Douglas A. Sampson, Esquire, and Samantha Twinam, to act as the agent for me and for PQ Controlling Entity, Inc, for the purposes of filing and obtaining any and all land use, zoning, and/or permitting approvals from the DC Board of Zoning Adjustment and the DC Office of Zoning, including an application for a special exception.

I hereby authorize AT&T and/or Smartlink, and any and all of their agents and representatives, its employees, contractors and agents to represent and act as agent in discussions and applications for new site development and modifications, all actions associated with the project, including jurisdictional zoning and permitting.

I respectfully request that the Board of Zoning Adjustment grant the requested relief. Any copy or facsimile of this document shall be valid and treated as an original. Thank you for your cooperation and consideration.

SIGNED BY
Name: JIMMY SUISSA
Title: AGENT OF PQCE
11-8-2021

38403779.1 11/08/2021

EXHIBIT 7

FA NUMBER: 15140160
SITE ID: 2874
SITE NAME: RASIKA

616 E STREET NW
WASHINGTON, DC 20004

DCRA

SITE INFORMATION

SCOPE OF WORK:

1. INSTALL AT&T EQUIPMENT CABINETS ON NEW EQUIPMENT SUPPORT PLATFORM ON LOW PENTHOUSE ROOF.
2. INSTALL (6) PROPOSED AND (6) FUTURE AT&T ANTENNAS AND ASSOCIATED RRH'S ON (2) NEW SCREENED ANTENNA SUPPORT PLATFORMS ON PENTHOUSE ROOF.
3. PROVIDE TELCO & POWER SERVICE TO AT&T EQUIPMENT FROM DEMARCATION POINTS IN THE BUILDING.
4. INSTALL EMERGENCY GENERATOR RECEPTACLE AT GRADE LEVEL.

FA#:	15140160
SITE ID:	2874
JURISDICTION:	DISTRICT OF COLUMBIA
ZONING:	DOWNTOWN ZONE (D-6-R)
TAX ACCOUNT NUMBER:	0457 0042
LOT/BOOK/PAGE:	0042/194/197
PARCEL AREA:	± 75,813 SF
PARCEL OWNER:	PQ CONTROLLING ENTITY, INC.
STRUCTURE TYPE:	ROOFTOP
GROUND ELEVATION:	±41.3' (AMSL)
LATITUDE:	N 38° 53' 44.186" (NAD83)
LONGITUDE:	W -77° 01' 15.931" (NAD83)

NOTE TO GENERAL CONTRACTOR
NO WORK IS TO BE PERFORMED ON THIS SITE WITHOUT REVIEW OF THE APPROVED STRUCTURAL ANALYSIS. IF ANY DISCREPANCIES ARE FOUND THE GENERAL CONTRACTOR SHALL NOTIFY ENGINEER IN WRITING. AT NO TIME WILL ANY ADDITIONAL ANTENNAS BE INSTALLED WITHOUT WRITTEN CONSENT FROM TOWER ENGINEER.

VICINITY MAP

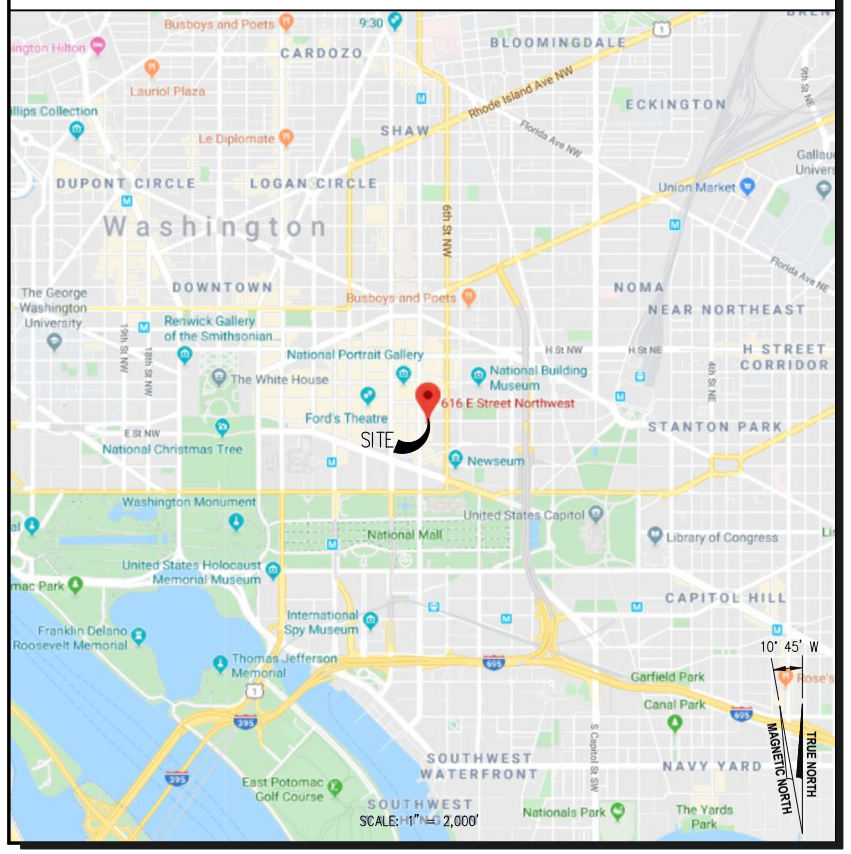

SHEET INDEX

T-1	TITLE SHEET
N-1	GENERAL NOTES
C-1	SITE PLAN
A-1	ROOF & EQUIPMENT LOCATION PLAN
A-2	NORTH BUILING ELEVATION
A-3	WEST AND SOUTH BUILDING ELEVATIONS
S-1	ANTENNA SCHEDULE
S-2	RF PLUMBING DIAGRAM
S-3	ANTENNA AND RRH DETAILS
S-4	ANTENNA SUPPORT FRAME AND LAYOUT PLANS (SECTORS A & C)
S-5	ANTENNA SUPPORT FRAME AND LAYOUT PLANS (SECTOR B)
S-6	ANTENNA PLATFORM ELEVATIONS (SECTORS A & C)
S-7	ANTENNA PLATFORM ELEVATIONS (SECTOR B)
S-8	SCREEN WALL DETAILS
S-9	ANTENNA PLATFORM STRUCTURAL DETAILS
S-10	EQUIPMENT PLATFORM PLAN
S-11	EQUIPMENT PLATFORM FRAMING PLAN
S-12	EQUIPMENT PLATFORM STRUCTURAL DETAILS
S-13	EQUIPMENT CABINET, LADDER AND CONDUIT DETAILS
E-1	ELECTRICAL PLANS, ELEVATION AND PANEL SCHEDULES
E-2	UTILITY RISER DIAGRAM AND DETAILS
E-3	GROUNDING PLAN, DIAGRAM AND DETAILS

Know what's below. Call before you dig.

SEAL:

DISTRICT OF COLUMBIA
CAMILLE F. SHABSHAB
10657
REGISTERED PROFESSIONAL ENGINEER

I AM RESPONSIBLE FOR DETERMINING THAT THE ENGINEERING DESIGNS INCLUDED IN THIS APPLICATION ARE IN COMPLIANCE WITH ALL RELEVANT LAWS AND REGULATIONS OF THE DISTRICT OF COLUMBIA. I HAVE PERSONALLY PREPARED, OR DIRECTLY SUPERVISED THE PREPARATION OF, THE ENGINEERING DESIGNS INCLUDED IN THIS APPLICATION

entrex communication services, inc.
6600 Rockledge Drive, Suite 550
Bethesda, MD 20817
PHONE: (202) 408-0960
FAX: (202) 408-0961

at&t
7150 STANDARD DRIVE
HANOVER, MD 21076

PROJECT NO: 1152.400
DESIGNER: TMF
ENGINEER: C.S.

THESE DRAWINGS ARE FORMATTED TO BE FULL-SIZE AT 22"X34"
0 1/2 1
GRAPHIC SCALE IN INCHES

smartlink
1362 MELLON RD, STE 140
HANOVER, MD 21076
PHONE: (410) 582-8043
FAX: (410) 221-2962

FA NUMBER: 15140160
SITE ID: 2874
RASIKA
616 E STREET NW
WASHINGTON, D.C. 20004

PROJECT TEAM

APPLICANT: AT&T MOBILITY
7150 STANDARD DRIVE
HANOVER, MD 21076

ARCHITECT/ENGINEER: ENTREX COMMUNICATION SERVICES, INC.
6600 ROCKLEDGE DRIVE, SUITE 550
BETHESDA, MD 20817
CAMILLE SHABSHAB (202) 408-0960

PROJECT MANAGEMENT: SMARTLINK LLC
1362 MELLON RD, SUITE 140
HANOVER, MD 21076
PHONE: (410) 582-8043

CODE COMPLIANCE

ALL WORK AND MATERIALS SHALL BE PERFORMED AND INSTALLED IN ACCORDANCE WITH THE CURRENT EDITIONS OF THE FOLLOWING CODES AS ADOPTED BY THE LOCAL GOVERNING AUTHORITIES. NOTHING IN THESE PLANS IS TO BE CONSTRUED TO PERMIT WORK NOT CONFORMING TO THE LATEST EDITIONS OF THE FOLLOWING CODES.

- 2017 DISTRICT OF COLUMBIA CONSTRUCTION CODE
- 2015 INTERNATIONAL BUILDING CODE
- 2017 DCMR 12C, DC ELECTRICAL CODE
- 2014 NATIONAL ELECTRICAL CODE
- 2017 DCMR 12H, DC FIRE CODE
- 2015 INTERNATIONAL FIRE CODE
- 2017 DCMR 12J, DC EXISTING BUILDING CODE
- AMERICAN CONCRETE INSTITUTE
- AMERICAN INSTITUTE OF STEEL CONSTRUCTION
- MANUAL OF STEEL CONSTRUCTION 13TH EDITION
- ANSI/TIA-222-G
- TIA 607
- INSTITUTE FOR ELECTRICAL & ELECTRONICS ENGINEER 81
- IEEE C2 NATIONAL ELECTRIC SAFETY CODE LATEST EDITION
- TELECORDIA GR-1275
- ANSI/T 311

APPROVAL BLOCK

		APPROVED	APPROVED AS NOTED	REVISE & RESUBMIT
OWNER REPRESENTATIVE	DATE	☐	☐	☐
SITE AQUISITION	DATE	☐	☐	☐
CONSTRUCTION MANAGER	DATE	☐	☐	☐
ZONING	DATE	☐	☐	☐
RF ENGINEER	DATE	☐	☐	☐

SUBMITTALS

DATE	DESCRIPTION	REVISION
04-22-2020	ADDITIONAL REDLINES	1
11-09-2020	REVISE POWER SOURCE	2
11-11-2020	COMMENTS	3
04-19-2021	EXPAND ANTENNA EMCLOSURE / ANTENNA CLEARANCES	4
08-23-2021	ADD ANTENNA ENCLOSURE STAIRS & UPDATE DC9'S	5

TITLE:

TITLE SHEET

SHEET NUMBER:

T-1

STRUCUTRAL NOTES

1. THE STRUCTURAL STEEL CONTRACTOR SHALL BE RESPONSIBLE FOR VERIFYING THE ANCHOR BOLT LOCATIONS, ELEVATIONS OF TOP OF CONCRETE AND BEARING PLATES, ALIGNMENT ETC. PRIOR OF STEEL ERECTION.

2. THE LATEST EDITION OF THE FOLLOWING SPECIFICATIONS SHALL GOVERN:
A. AISC- "ALLOWABLE STRESS DESIGN SPECIFICATION FOR STRUCTURAL STEEL BUILDINGS".
B. AISC- "CODE OF STANDARD PRACTICE FOR STEEL BUILDINGS AND BRIDGES".
C. AWS- "D1.1 STRUCTURAL WELDING CODE-STEEL".

3. MATERIAL, UNLESS OTHERWISE NOTED, SHALL CONFORM TO THE FOLLOWING ASTM SPECIFICATIONS

STRUCTURAL WIDE FLANGE & M SHAPES	A992 OR A572, FY = 50KSI
OTHER STRUCTURAL SHAPES AND PLATES	A36, F = 36KSI
STRUCTURAL TUBING	A500, GRADE B, FY = 46KSI
HIGH STRENGTH BOLTS	A325
THREADED RODS	A354, GRANDE BC
ANCHOR BOLTS	A325 OR A354 BC
PIPE (HANDRAIL)	SCH 40 PIPE

4. ALL WELDING SHALL BE IN ACCORDANCE WITH AWS D1.1 USING E70XX ELECTRODES. UNLESS OTHERWISE NOTED PROVIDE CONTINUOUS MINIMUM SIZED FILLET WELDS PER AISC REQUIREMENTS.

5. HOLES IN STEEL SHALL BE DRILLED OR PUNCHED. ALL SLOTTED HOLES SHALL BE PROVIDED WITH SMOOTH EDGES. BURNING OF HOLES AND TORCH CUTTING AT THE SITE IN NOT PERMITTED. ALL HOLES IN BEARING PLATES SHALL BE DRILLED.

6. ALL STEEL TO BE HOT-DIPPED GALVANIZED AFTER FABRICATION PER ASTM A123.

7. EPOXY ANCHORS TO BE INSTALLED PER MANUFACTURER'S SPECIFICATIONS.

8. ALL BOLTS SHALL BE TIGHTENED USING TURN-OF-THE-NUT METHOD PER AISC SPECIFICATIONS USING STANDARD HOLES.

9. THE INFORMATION SHOWN ON THESE DRAWINGS WAS OBTAINED BY FIELD MEASUREMENT. THE GENERAL CONTRACTOR SHALL VERIFY ALL EXISTING CONDITIONS AND NOTIFY THE ENGINEER OF ANY DISCREPANCIES PRIOR TO ORDERING MATERIALS OR PROCEEDING WITH CONSTRUCTION.

10. THE GENERAL CONTRACTOR AND HIS SUB CONSULTANTS SHALL BE RESPONSIBLE FOR OBTAINING ALL BUILDING AND OR TRADE PERMITS AND INSPECTIONS THAT MAY BE REQUIRED FOR THE WORK.

11. STRUCTURAL THREADED FASTENERS FOR STEEL ANTENNA MOUNTING ASSEMBLIES SHALL CONFORM TO ASTM A307 OR ASTM A36. STRUCTURAL FASTENERS FOR STRUCTURAL STEEL FRAMING SHALL CONFORM TO ASTM A325. STRUCTURAL FASTENERS SHALL BE 5/8" DIAMETER BEARING TYPE CONNECTIONS WITH THE THREADS EXCLUDED FROM THE SHEAR PLANE FOR ANGLES. STRUCTURAL FASTENERS SHALL BE 3/4" DIAMETER BEARING TYPE CONNECTIONS WITH THE THREADS EXCLUDED FROM THE SHEAR PLANE FOR ALL OTHER STRUCTURAL SHAPES. ALL EXPOSED STRUCTURAL FASTENERS, NUTS AND WASHERS SHALL BE HOT DIP GALVANIZED UNLESS OTHERWISE NOTED.

12. EXPANSION ANCHORS INSTALLED IN CONCRETE SHALL BE HILTI STAINLESS STEEL ANCHORS AS SPECIFIED ON THE PLANS. THE EXPANSIONS ANCHORS SHALL BE INSTALLED IN ACCORDANCE WITH THE MANUFACTURERS DIRECTIONS.

13. NORTH ARROW SHOWN ON PLANS REFERS TO TRUE NORTH. CONTRACTOR SHALL SHALL VERIFY NORTH AND INFORM ARCHITECT/ENGINEER OF ANY DISCREPANCY BEFORE STARTING CONSTRUCTION.

14. ROOF PROTECTION PADS UNDER THE CABLE BRIDGE SLEEPERS AND ROOF PAVERS SHALL BE 0.30" THICK RUBBER FIRESTONE PROTECTION PADS. THE ROOF PROTECTION PADS SHALL EXTEND A MINIMUM OF 2" BEYOND THE PERIMETER OF THE OF THE SLEEPERS. PROVIDE A 28 LB FELT SEPARATOR SHEET 2" LARGER THAN THE ROOF PROTECTION PAD DIRECTLY ON THE ROOF. REMOVE ALL LOOSE STONES PRIOR TO PLACING THE SEPARATOR SHEET. ROOF PROTECTION PADS SHALL NOT BE PLACED WITH IN 6" OF AN ADJACENT PAD OR OTHER ROOF OBSTRUCTION TO FACILITATE DRAINAGE.

15. THE CONTRACTOR SHALL COORDINATE ALL WORK WITH THE BUILDING OWNER'S ROOF CONTRACTOR WHO WILL COMPLETE ALL WORK ASSOCIATED WITH THE ROOF. THE CONTRACTOR SHALL OBTAIN WRITTEN APPROVAL FROM THE BUILDING OWNER'S ROOF CONTRACTOR BEFORE INSTALLATION OF ANY ROOF MOUNTED EQUIPMENT.

16. ALL CAST IN PLACE CONCRETE SHALL BE MIXED AND PLACED IN ACCORDANCE WITH THE REQUIREMENTS OF ACI 318 AND ACI 301, AND SHALL HAVE A 28 DAY MINIMUM COMPRESSIVE STRENGTH OF 3000 psi (U.O.N). CONCRETE SHALL BE PLACED AGAINST UNDISTURBED SOIL, UNLESS OTHERWISE NOTED. MINIMUM CONCRETE COVER FOR REINFORCING STEEL SHALL BE 3 INCHES UNLESS OTHERWISE NOTED.

17. CONCRETE SHALL BE 4 TO 6% AIR ENTRAINED.

18. ALL REINFORCING STEEL SHALL CONFORM TO ASTM 615 GRADE 60. DEFORMED BILLET STEEL BARS. WELDED WIRE FABRIC SHALL CONFORM TO ASTM A185.

19. FENCED AREA SHALL BE CLEARED AND GRUBBED. REMOVE UNSUITABLE LOOSE OR SOFT SOIL, ORGANIC MATERIAL OR RUBBLE, TO FIRM SUBGRADE. FILL UNDER CUT AND COMPACT UP TO 6" BELOW FINISH GRADE. PLACE A MIRAFI 500X SOIL STABILIZATION FABRIC ON SUBGRADE. FILL WITH 6" OF AASHTO 57 STONE TO FINISH GRADE.

20. WHERE FILL IS REQUIRED, FILL IN LAYERS WHICH DO NOT EXCEED 8" BEFORE COMPACTION. SPREAD LAYER UNIFORMLY AND EVENLY. BLADE MIX EACH LAYER TO ENSURE MATERIAL UNIFORMITY. FILL MATERIAL SHALL NOT CONTAIN MATERIAL MORE THAN 3" IN DIAMETER. COMPACT EACH LAYER NOT LESS THAN 95% OF MAXIMUM DRY DENSITY AS DETERMINED BY ASTM D1557 MODIFIED PROCTOR TEST OR (ASTM D698 STANDARD PROCTOR TEST). USE FILL MATERIAL WITH MOISTURE CONTENT AS REQUIRED TO ATTAIN THE SPECIFIED DEGREE OF COMPACTION. COMPACT USING MULTIPLE WHEEL PNEUMATIC TIRE ROLLED, VIBRATORY ROLLER, OR SHEEPS FOOT ROLLERS.

GENERAL NOTES

1. THE CONTRACTOR SHALL COMPLY WITH ALL APPLICABLE CODES ORDINANCES, LAWS AND REGULATIONS OF ALL MUNICIPALITIES, UTILITIES COMPANY OR OTHER PUBLIC AUTHORITIES.

2. THE CONTRACTOR SHALL BE RESPONSIBLE FOR OBTAINING ALL PERMITS AND INSPECTIONS THAT MAY BE REQUIRED BY ANY FEDERAL, STATE, COUNTY OR MUNICIPAL AUTHORITIES.

3. THE CONTRACTOR SHALL NOTIFY THE CONSTRUCTION MANAGER, IN WRITING, OF ANY CONFLICTS, ERRORS OR OMISSIONS PRIOR TO THE SUBMISSION OF BIDS OR PERFORMANCE OF WORK. MINOR OMISSIONS OR ERRORS IN THE BID DOCUMENTS SHALL NOT RELIEVE THE CONTRACTOR FROM RESPONSIBILITY FOR THE OVERALL INTENT OF THESE DRAWINGS.

4. THE CONTRACTOR SHALL BE RESPONSIBLE FOR PROTECTING ALL EXISTING SITE IMPROVEMENTS PRIOR TO COMMENCING CONSTRUCTION. THE CONTRACTOR SHALL REPAIR ANY DAMAGE CAUSED AS A RESULT OF CONSTRUCTION OF THIS FACILITY.

5. THE SCOPE OF WORK FOR THIS PROJECT SHALL INCLUDE PROVIDING ALL MATERIALS, EQUIPMENT AND LABOR REQUIRED TO COMPLETE THIS PROJECT. ALL EQUIPMENT SHALL BE INSTALLED IN ACCORDANCE WITH THE MANUFACTURER'S RECOMMENDATIONS.

6. THE CONTRACTOR SHALL VISIT THE PROJECT SITE PRIOR TO SUBMITTING A BID TO VERIFY THAT THE PROJECT CAN BE CONSTRUCTED IN ACCORDANCE WITH THE CONTRACT DOCUMENTS.

7. CONTRACTOR SHALL VERIFY ANTENNA ELEVATION AND AZIMUTH WITH RF ENGINEERING PRIOR TO INSTALLATION.

8. TRANSMITTER EQUIPMENT AND ANTENNAS ARE DESIGNED TO MEET ANSI/EIA/TIA 222-G REQUIREMENTS.

9. ALL STRUCTURAL ELEMENTS SHALL BE HOT DIPPED GALVANIZED STEEL.

10. CONTRACTOR SHALL MAKE A UTILITY "ONE CALL" TO LOCATE ALL UTILITIES PRIOR TO EXCAVATING.

11. IF ANY UNDERGROUND UTILITIES OR STRUCTURES EXIST BENEATH THE PROJECT AREA, CONTRACTOR MUST LOCATE IT AND CONTACT THE APPLICANT & THE OWNER'S REPRESENTATIVE.

12. OCCUPANCY IS LIMITED TO PERIODIC MAINTENANCE AND INSPECTION BY TECHNICIANS APPROXIMATELY 2 TIMES PER MONTH.

13. PROPERTY LINE INFORMATION WAS PREPARED USING DEEDS, TAX MAPS, AND PLANS OF RECORD AND SHOULD NOT BE CONSTRUED AS AN ACCURATE BOUNDARY SURVEY.

14. THIS PLAN IS SUBJECT TO ALL EASEMENTS AND RESTRICTIONS OF RECORD.

15. THE PROPOSED FACILITY WILL CAUSE ONLY A "DE MINIMIS" INCREASE IN STORMWATER RUNOFF. THEREFORE, NO DRAINAGE STRUCTURES ARE PROPOSED.

16. NO SIGNIFICANT NOISE, SMOKE, DUST OR ODOR WILL RESULT FROM THIS FACILITY.

17. THE FACILITY IS UNMANNED AND NOT INTENDED FOR HUMAN HABITATION (NO HANDICAP ACCESS REQUIRED).

18. THE FACILITY IS UNMANNED AND DOES NOT REQUIRE POTABLE WATER OR SANITARY SERVICE.

19. POWER TO THE FACILITY WILL BE MONITORED BY A SEPARATE METER UNLESS OTHERWISE NOTED IN THIS DRAWING SET.

20. ALL ANTENNA SCREENING SHALL BE FINISHED OR PAINTED TO MATCH THE STRUCTURE AS DIRECTED BY THE FACILITIES MANAGEMENT DIVISION.

GROUNDING NOTES

1. GROUNDING SHALL COMPLY WITH ARTICLE 250 OF THE NATIONAL ELECTRICAL CODE.

2. ALL GROUNDING DEVICES SHALL BE U.L. APPROVED OR LISTED FOR THEIR INTENDED USE.

3. ALL WIRES SHALL BE AWG THHN/THWN COPPER UNLESS NOTED OTHERWISE.

4. GROUNDING CONNECTIONS TO GROUND RODS, GROUND RING WIRE, TOWER BASE AND FENCE POSTS SHALL BE EXOTHERMIC ("CADWELDS") UNLESS NOTES OTHERWISE. CLEAN SURFACES TO SHINY METAL. WHERE GROUND WIRES ARE CADWELDED TO GALVANIZED SURFACE, SPRAY CADWELD WITH GALVANIZING PAINT.

5. GROUNDING CONNECTIONS TO GROUND BARS ARE TO BE TWO HOLE BRASS MECHANICAL CONNECTORS WITH STAINLESS STEEL HARDWARE (INCLUDING SCREW SET) CLEAN GROUND BAR TO SHINY METAL. AFTER MECHANICAL CONNECTION, TREAT WITH PROTECTIVE ANTIOXIDANT COATING.

6. GROUND COAXIAL CABLE SHIELDS AT BOTH ENDS WITH MANUFACTURER'S GROUNDING KITS.

7. ROUTE GROUNDING CONDUCTORS THE SHORTEST AND STRAIGHTEST PATH POSSIBLE. BEND GROUNDING LEADS WITH A MINIMUM 12" RADIUS.

8. INSTALL 2 AWG GREEN-INSULATED STRANDED WIRE FOR ABOVE GRADE GROUNDING AND 2 BARE TINNED COPPER WIRE FOR BELOW GRADE GROUNDING UNLESS OTHERWISE NOTED.

9. REFER TO GROUNDING PLAN FOR GROUND BAR LOCATIONS. GROUNDING CONNECTIONS SHALL BE EXOTHERMIC TYPE ("CADWELDS") TO ANTENNA MOUNTS AND GROUND RING. REMAINING GROUNDING CONNECTIONS SHALL BE COMPRESSION FITTINGS. CONNECTION TO GROUND BARS SHALL BE MADE WITH TWO-HOLE LUGS.

10. THE GROUND ELECTRODE SYSTEM SHALL CONSIST OF DRIVEN GROUND RODS POSITION ACCRUING TO GROUNDING PLAN. THE GROUND RODS SHALL BE 5/8"x8'-0" COPPER CLAD STEEL INTERCONNECTED WITH 2 BARE TINNED COPPER WIRE BURIED 30" BELOW GRADE. BURY GROUND RODS A MAXIMUM OF 15' APART, AND A MINIMUM OF 8' APART TO ACHIEVE CONE OF PROTECTION.

11. IF ROCK IS ENCOUNTERED GROUND RODS SHALL BE PLACED AT AN OBLIQUE ANGLE NOT TO EXCEED 45'.

12. EXOTHERMIC WELDS SHALL BE MADE IN ACCORDANCE WITH ERICO PRODUCTS BULLETIN A-AT.

13. CONSTRUCTION OF GROUND RING AND CONNECTIONS TO EXISTING GROUND RING SYSTEM SHALL BE DOCUMENTED WITH PHOTOGRAPHS PRIOR TO BACKFILLING SITE. PROVIDE PHOTOS TO THE AT&T CONSTRUCTION MANAGER.

14. GROUND RING & CONNECTIONS TO IT SHALL BE 2 AWG SOLID BARE TINNED COPPER WIRE. EQUIPMENT GROUND CONNECTIONS TO MGB SHALL BE 2 AWG STRANDED TO WIRE.

15. PRIOR TO INSTALLING LUGS ON GROUND WIRES, APPLY THOMAS & BETTS KOPR-SHIELD (TM OF JET LUBE INC.). PRIOR TO BOLTING GROUND WIRE LUGS TO GROUND BARS, APPLY KOPR-SHIELD OR EQUAL.

16. ENGAGE AN INDEPENDENT ELECTRICAL TESTING FIRM TO TEST AND VERIFY THAT IMPEDANCE DOES NOT EXCEED FIVE OHMS TO GROUND BY MEANS OF "FALL OF POTENTIAL TEST". TEST SHALL BE WITNESSED BY A AT&T REPRESENTATIVE, AND RECORDED ON THE "GROUND RESISTANCE TEST" FORM.

17. WHERE BARE COPPER GROUND WIRES ARE ROUTED FROM ANY CONNECTION ABOVE GRADE TO GROUND RING, INSTALL WIRE IN 3/4" PVC SLEEVE, FROM 1' BELOW GRADE AND SEAL TOP WITH SILICONE MATERIAL.

18. PREPARE ALL BONDING SURFACES FOR GROUNDING CONNECTIONS BY REMOVING ALL PAINT AND CORROSION DOWN TO SHINY METAL. FOLLOWING CONNECTIONS, APPLY APPROPRIATE ANTI-OXIDIZATION PAINT.

19. WHERE METALLIC ENCLOSURES AND OBJECTS ARE LOCATED WITHIN 6 FEET OF METAL FENCING, THE GROUND RING SHALL BE BONDED TO THE NEAREST FENCE POST.

20. TOWER BASE GROUND BAR REQUIRES (2) SOLID LEADS EXOTHERMICALLY WELDED TO THE GROUND BAR.

21. OUTDOOR SITES: MAIN GROUND BAR REQUIRES (2) SOLID LEADS EXOTHERMICALLY WELDED TO IT AND TO THE GROUND RING.

22. INDOOR/ROOFTOP SITES: MAIN GROUND BAR SHALL BE BONDED TO BUILDING PRINCIPAL GROUND AS SHOWN ON PLAN.

23. ALL SOLID LEADS TERMINATED TO GROUND BARS SHALL BE PROTECTED WITH CARFLEX.

24. ALL SOLID GROUND LEADS NOT BEING USED SHALL BE COILED (PIGTAILS) FOR FUTURE USE AS NEEDED.

25. DO NOT ROUTE GROUNDING CONDUCTORS THROUGH METALLIC OBJECTS THAT FORM A RING AROUND THE CONDUCTOR. CLIPS AND FASTENERS USED TO SECURE ANY GROUND WIRE SHALL BE NON-METALLIC TO PREVENT "CHOKE EFFECT."

ELECTRICAL ABBREVIATIONS

A	AMPERE	MCB	MAIN CIRCUIT BREAKER
AIC	ASYMMETRICAL INTERRUPT CURRENT	MLO	MAIN LUGS ONLY
AWG	AMERICAN WIRE GAUGE	NEC	NATIONAL ELECTRICAL CODE
C	CONDUIT	NTS	NOT TO SCALE
CSC	CELL SITE CABINET	NFSS	NON-FUSIBLE SAFETY SWITCH
FSS	FUSIBLE SAFETY SWITCH	PVC	POLYVINYL CHLORIDE
GFI	GROUND FAULT INTERRUPTING	P	POLE
G	GROUND	ø	PHASE
kVA	KILOVOLT-AMPERE	RMC	RIGID METAL CONDUIT
KW	KILOWATT	V	VOLT
LFMC	LIQUIDTIGHT FLEXIBLE METAL CONDUIT	W	WIRE
LFNC	LIQUIDTIGHT FLEXIBLE NONMETALLIC CONDUIT		

ELECTRICAL NOTES

1. SUBMITTAL OF BID INDICATES THAT THE CONTRACTOR IS COGNIZANT OF ALL JOB SITE CONDITIONS AND WORK TO BE PERFORMED UNDER THIS CONTRACT.

2. CONTRACTOR SHALL PERFORM ALL VERIFICATIONS, OBSERVATION TESTS, AND EXAMINATION WORK PRIOR TO ORDERING OF ANY EQUIPMENT AND THE ACTUAL CONSTRUCTION. CONTRACTOR SHALL ISSUE A WRITTEN NOTICE OF ALL FINDINGS TO THE PROJECT MANAGER LISTING ALL MALFUNCTIONS, FAULTY EQUIPMENT AND DISCREPANCIES.

3. VERIFY HEIGHT WITH PROJECT MANAGER PRIOR TO INSTALLATION.

4. THESE PLANS ARE DIAGRAMMATIC ONLY, FOLLOW AS CLOSELY AS POSSIBLE.

5. CONTRACTOR SHALL COORDINATE ALL WORK BETWEEN TRADES AND ALL OTHER SCHEDULING AND PROVISIONALLY CIRCUMSTANCES SURROUNDING THE PROJECT.

6. CONTRACTOR SHALL PROVIDE ALL LABOR, MATERIALS, INSURANCE, EQUIPMENT INSTALLATION CONSTRUCTION TOOLS, TRANSPORTATION ETC., FOR COMPLETE AND FUNCTIONALLY OPERATING SYSTEMS ENERGIZED AND READY FOR USE THROUGHOUT AS INDICATED ON DRAWINGS, AS SPECIFIED HEREIN AND/OR AS OTHERWISE REQUIRED.

7. ALL MATERIAL AND EQUIPMENT SHALL BE NEW AND IN PERCENT CONDITION WHEN INSTALLED AND SHALL BE OF THE BEST GRADE AND OF THE SAME MANUFACTURER THROUGHOUT FOR EACH CLASS OR GROUP OF EQUIPMENT. ELECTRICAL MATERIALS SHALL BE LISTED AND APPROVED BY UNDERWRITER'S LABORATORIES AND SHALL BEAR THE INSPECTION LABEL "J" WHERE SUBJECT TO SUCH APPROVAL. MATERIALS SHALL MEET WITH APPROVAL OF ALL GOVERNING BODIES HAVING JURISDICTION OVER THE CONSTRUCTION. MATERIALS SHALL BE MANUFACTURED IN ACCORDANCE WITH ALL CURRENT APPLICABLE STANDARDS ESTABLISHED BY ANSI, NEMA AND NBFU. ALL MATERIALS AND EQUIPMENT SHALL BE APPROVED FOR THEIR INTENDED USE AND LOCATION.

8. ALL WORK SHALL COMPLY WITH ALL APPLICABLE GOVERNING STATE, COUNTY AND CITY CODES AND OSHA, NFPA, NEC & ASHRAE REQUIREMENTS.

9. ENTIRE JOB SHALL BE GUARANTEED FOR A PERIOD OF ONE (1) YEAR AFTER THE DATE OF JOB ACCEPTANCE. ALL WORK, MATERIAL AND EQUIPMENT FOUND TO BE FAULTY DURING THAT PERIOD SHALL BE CORRECTED AT ONCE, UPON WRITTEN NOTIFICATION, AT THE EXPENSE OF THE CONTRACTOR.

10. PROPERLY SEAL ALL PENETRATIONS. PROVIDE UL LISTED FIRE-STOPS WHERE PENETRATIONS ARE MADE THROUGH FIRE-RATED ASSEMBLIES. WATER-TIGHT USING SILICONE SEALANT.

11. LOCATE ALL PENETRATIONS SUCH THAT ALL REINFORCEMENT CONTAINED WITHIN THE EXISTING BUILDING CONSTRUCTION REMAINS INTACT AND UNDISTURBED. SUBMIT LOCATING METHOD TO PROJECT MANAGER FOR APPROVAL PRIOR TO EXECUTION.

12. DELIVER ALL BROCHURES, OPERATING MANUALS, CATALOGS AND SHOP DRAWINGS TO THE PROJECT MANAGER AT JOB COMPLETION. PROVIDE MAINTENANCE MANUALS FOR MECHANICAL EQUIPMENT. AFFIX MAINTENANCE LABELS TO MECHANICAL EQUIPMENT.

13. ALL CONDUCTORS SHALL BE COPPER. MINIMUM CONDUCTOR SIZE SHALL BE 12 AWG., UNLESS OTHERWISE NOTED. CONDUCTORS SHALL BE TYPE THHW, RATED IN ACCORDANCE WITH NEC 110-14(C).

14. ALL CIRCUIT BREAKERS, FUSES AND ELECTRICAL EQUIPMENT SHALL HAVE AN INTERRUPTING RATING NOT LESS THE MAXIMUM INTERRUPTING CURRENT TO WHICH THEY MAY BE SUBJECTED.

15. THE ENTIRE ELECTRICAL INSTALLATION SHALL BE GROUNDED IN ACCORDANCE WITH THE NATIONAL ELECTRICAL CODE; ARTICLES 250 & 810 AND THE UTILITY COMPANY STANDARDS.

16. CONDUIT: ALL ABOVE GRADE CONDUITS SHALL BE RIGID & LFMC TO 6' AS STATED BELOW

A. RIGID CONDUIT SHALL BE U.L. LABEL GALVANIZED ZINC COATED WITH ZINC INTERIOR AND SHALL BE USED WHEN INSTALLED IN OR UNDER CONCRETE SLABS, IN CONTACT WITH THE EARTH, UNDER PUBLIC ROADWAYS, IN MASONRY WALLS OR EXPOSED ON BUILDING EXTERIOR. RIGID CONDUIT IN CONTACT WITH EARTH SHALL BE 1/2 LAPPED WRAPPED WITH HUNTS WRAP PROCESS NO. 3.

B. ELECTRICAL METALLIC TUBING SHALL HAVE U.L. LABEL, FITTINGS SHALL BE GLAND RING COMPRESSION TYPE. EMT SHALL BE USED ONLY FOR INTERIOR RUNS.

C. LIQUID-TIGHT FLEXIBLE METAL CONDUIT SHALL BE U.L. LISTED AND SHALL BE USED AT FINAL CONNECTIONS TO MECHANICAL EQUIPMENT & RECTIFIERS AND WHERE PERMITTED BY CODE. ALL CONDUIT IN EXCESS OF SIX FEET IN LENGTH SHALL CONTAIN A FULL-SIZE GROUND CONDUCTOR.

D. CONDUIT RUNS SHALL BE SURFACE MOUNTED ON CEILINGS OR WALLS UNLESS NOTED OTHERWISE. ALL CONDUIT SHALL RUN PARALLEL OR PERPENDICULAR TO WALLS, FLOOR, CEILING, OR BEAMS. VERIFY EXACT ROUTING OF ALL EXPOSED CONDUIT WITH THE PROJECT MANAGER PRIOR TO INSTALLING.

E. PVC CONDUIT MAY BE PROVIDED ONLY WHERE SHOWN, OR IN UNDERGROUND INSTALLATIONS. PROVIDE UV-RESISTANT CONDUIT WHERE EXPOSED TO THE ATMOSPHERE. PROVIDE GROUND CONDUCTOR IN ALL PVC RUNS; EXCEPT WHERE PERMITTED BY CODE TO OMIT.

F. THE TOTAL RADII OF BENDS IN A CONDUIT SHALL NOT EXCEED 360'.

17. ALL ELECTRICAL EQUIPMENT SHALL BE LABELED WITH PERMANENT ENGRAVED PHENOLIC PLASTIC NAMEPLATES. BACKGROUND SHALL BE BLACK WITH WHITE LETTERS; EXCEPT AS REQUIRED BY CODE TO FOLLOW A DIFFERENT SCHEME.

18. UPON COMPLETION OF WORK, CONDUCT CONTINUITY, SHORT CIRCUIT, AND FALL OF POTENTIAL GROUNDING TESTS FOR APPROVAL. SUBMIT TEST REPORTS TO AT&T PROJECT MANAGER. GROUNDING SYSTEM RESISTANCE SHALL NOT EXCEED 5 OHMS. IF THE RESISTANCE VALUE IS EXCEEDED, NOTIFY THE AT&T PROJECT MANAGER FOR FURTHER INSTRUCTION ON METHODS FOR REDUCING THE RESISTANCE VALUE.

19. CLEAN PREMISES OF ALL DEBRIS RESULTING FROM WORK AND LEAVE WORK IN A COMPLETE AND UNDAMAGED CONDITION. LEGALLY DISPOSE OF ALL REMOVED, UNUSED AND EXCESS MATERIAL GENERATED BY THE WORK OF THIS CONTRACT. DELIVER ITEMS INDICATED ON THE DRAWINGS TO THE OWNER IN GOOD CONDITION. OBTAIN SIGNED RECEIPT UPON DELIVERY.

20. COORDINATE WITH UTILITY COMPANY FOR CONNECTION OF TEMPORARY AND PERMANENT POWER TO THE SITE. THE TEMPORARY POWER AND ALL HOOKUP COSTS SHALL BE PAID BY THE CONTRACTOR.

21. VERIFY ALL EXISTING CIRCUITRY PRIOR TO REMOVAL AND NEW WORK. MAINTAIN POWER TO ALL OTHER AREAS AND CIRCUITS NOT SCHEDULED FOR REMOVAL.

22. RED LINED AS-BUILT PLANS SHALL BE PROVIDED TO THE AT&T CONSTRUCTION MANAGER.

DCRA

SEAL:

DISTRICT OF COLUMBIA
CAMILLE F. SHABSHAB
10657
PROFESSIONAL ENGINEER REGISTERED

I AM RESPONSIBLE FOR DETERMINING THAT THE ENGINEERING DESIGNS INCLUDED IN THIS APPLICATION ARE IN COMPLIANCE WITH ALL RELEVANT LAWS AND REGULATIONS OF THE DISTRICT OF COLUMBIA. I HAVE PERSONALLY PREPARED, OR DIRECTLY SUPERVISED THE PREPARATION OF, THE ENGINEERING DESIGNS INCLUDED IN THIS APPLICATION

entrex communication services, inc.
6600 Rockledge Drive, Suite 550
Bethesda, MD 20817
PHONE: (202) 408-0960
FAX: (202) 408-0961

at&t
7150 STANDARD DRIVE
HANOVER, MD 21076

smartlink
1362 MELLON RD, STE 140
HANOVER, MD 21076
PHONE: (410) 582-8043
FAX: (410) 221-2962

PROJECT NO:	1152.400
DESIGNER:	TMF
ENGINEER:	C.S.

THESE DRAWINGS ARE FORMATTED TO BE FULL-SIZE AT 22"X34"
0 1/2 1
GRAPHIC SCALE IN INCHES

FA NUMBER: 15140160
SITE ID: 2874
RASIKA
616 E STREET NW
WASHINGTON, D.C. 20004

SUBMITTALS

DATE	DESCRIPTION	REVISION
04-22-2020	ADDITIONAL REDLINES	1
11-09-2020	REVISE POWER SOURCE	2
11-11-2020	COMMENTS	3
04-19-2021	EXPAND ANTENNA EMCLOSURE / ANTENNA CLEARANCES	4
08-23-2021	ADD ANTENNA ENCLOSURE STAIRS & UPDATE DC9'S	5

TITLE:

GENERAL NOTES

SHEET NUMBER:

N-1

SITE PLAN NOTES

1.) SITE NAME: RASIKA
2.) OWNER: PQ CONTROLLING ENTITY, INC.

MAILING ADDRESS: 616 E STREET NW
WASHINGTON, DC 20004

COUNTY: DISTRICT OF COLUMBIA
SSL: 0457 0042
LAND USE: COMMERCIAL OFFICE – LARGE (052)
ZONING: DOWNTOWN ZONE (D-6-R)

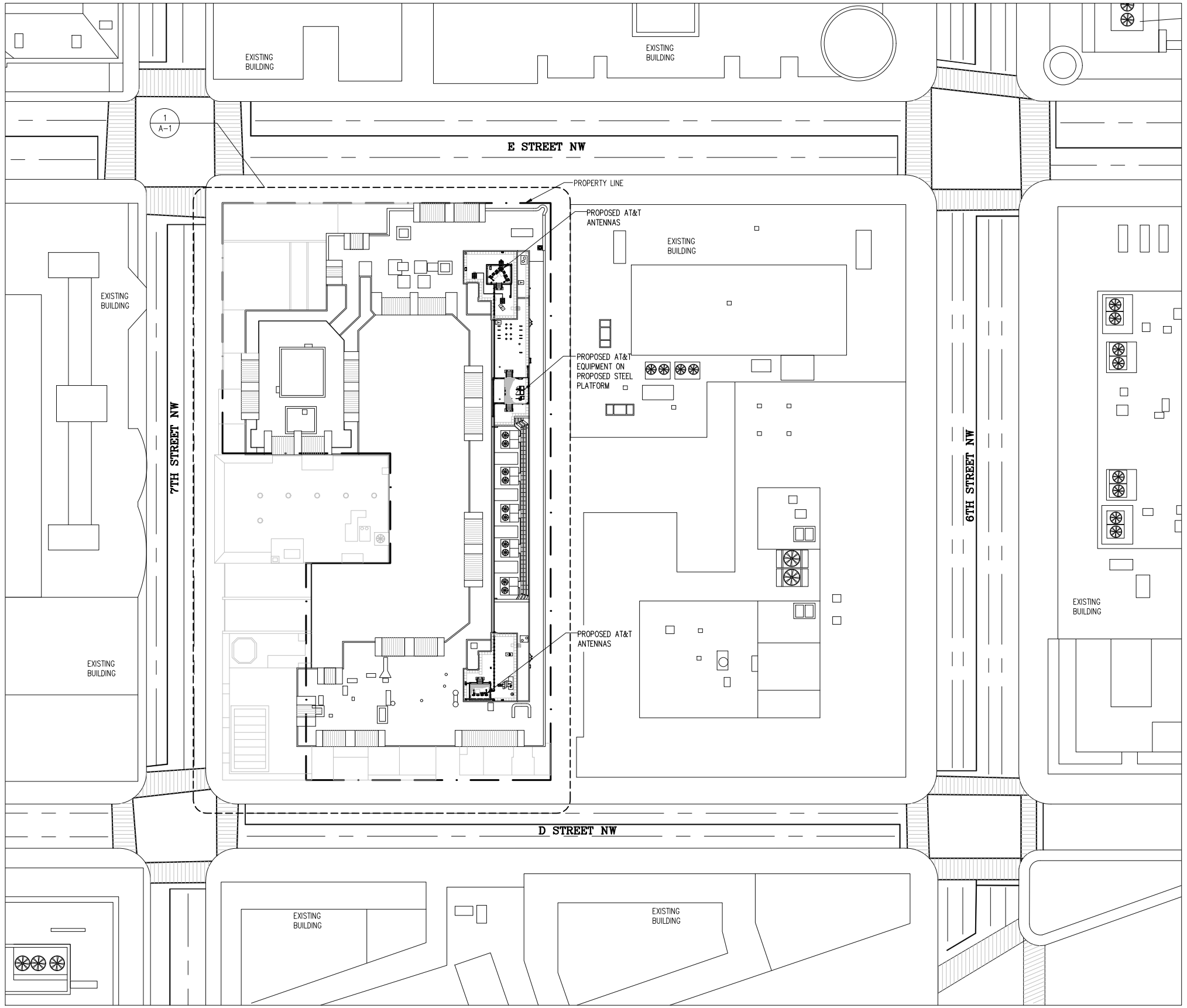

SITE PLAN
SCALE: 1" = 40'-0"
1
C-1
TRUE NORTH

DCRA

SEAL:

DISTRICT OF COLUMBIA
CAMILLE F. SHABSHAB
10657
PROFESSIONAL ENGINEER
REGISTERED

I AM RESPONSIBLE FOR DETERMINING THAT THE ENGINEERING DESIGNS INCLUDED IN THIS APPLICATION ARE IN COMPLIANCE WITH ALL RELEVANT LAWS AND REGULATIONS OF THE DISTRICT OF COLUMBIA. I HAVE PERSONALLY PREPARED, OR DIRECTLY SUPERVISED THE PREPARATION OF, THE ENGINEERING DESIGNS INCLUDED IN THIS APPLICATION

entrex
communication services, inc.
6600 Rockledge Drive, Suite 550
Bethesda, MD 20817
PHONE: (202) 408-0960
FAX: (202) 408-0961

at&t
7150 STANDARD DRIVE
HANOVER, MD 21076

smartlink
1362 MELLON RD, STE 140
HANOVER, MD 21076
PHONE: (410) 582-8043
FAX: (410) 221-2962

PROJECT NO: 1152.400
DESIGNER: TMF
ENGINEER: C.S.

THESE DRAWINGS ARE FORMATTED TO BE FULL-SIZE AT 22"X34"
0 1/2 1
GRAPHIC SCALE IN INCHES

FA NUMBER: 15140160
SITE ID: 2874
RASIKA
616 E STREET NW
WASHINGTON, D.C. 20004

SUBMITTALS

DATE	DESCRIPTION	REVISION
04-22-2020	ADDITIONAL REDLINES	1
11-09-2020	REVISE POWER SOURCE	2
11-11-2020	COMMENTS	3
04-19-2021	EXPAND ANTENNA EMCLOSURE / ANTENNA CLEARANCES	4
08-23-2021	ADD ANTENNA ENCLOSURE STAIRS & UPDATE DC9'S	5

TITLE:

SITE PLAN

SHEET NUMBER:
C-1

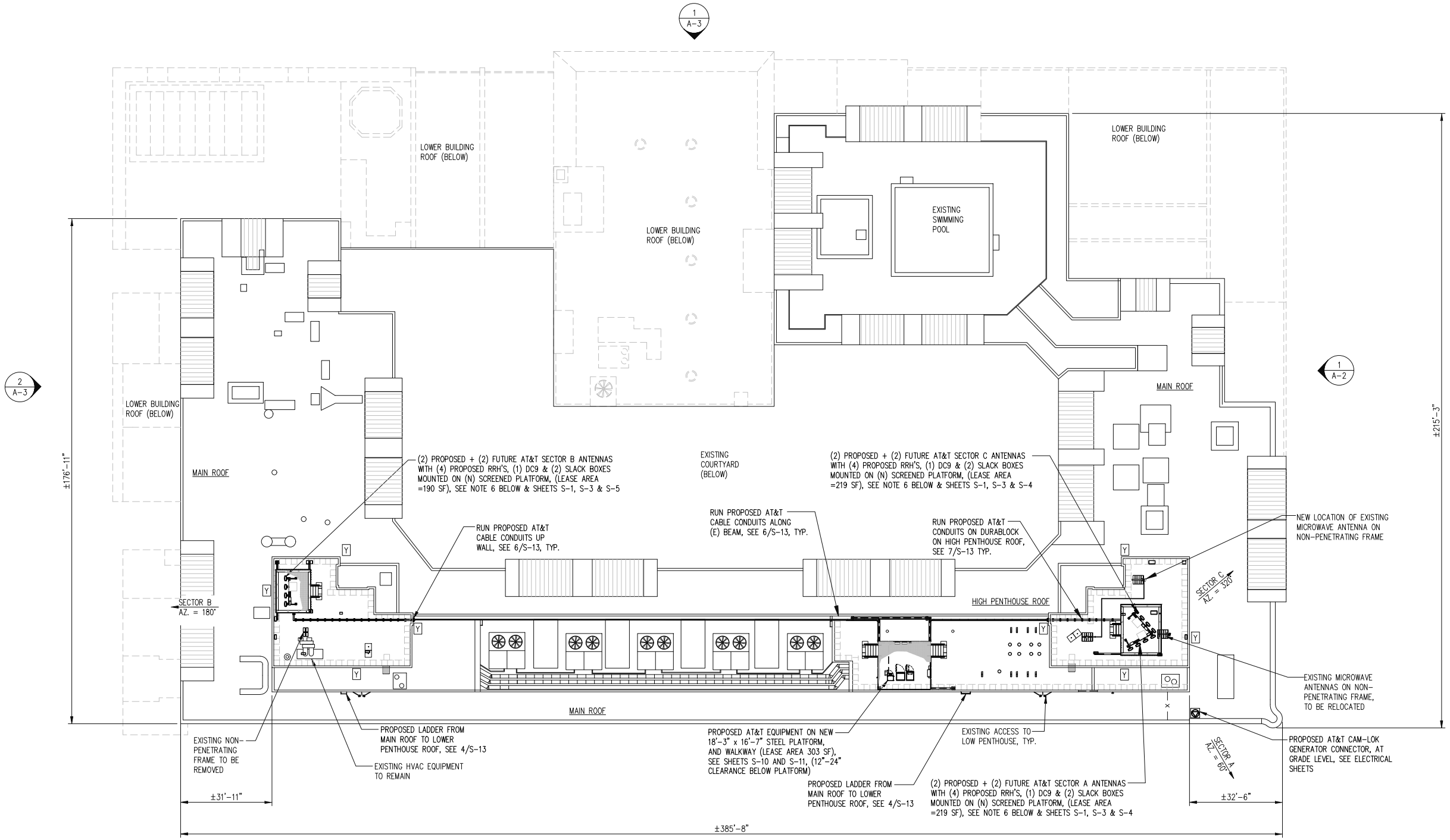

ROOF AND EQUIPMENT LAYOUT PLAN

SCALE: 1" = 20'-0"

1 A-1 TRUE NORTH

RF LEGEND	
- - - -	= RF BARRIER CHAIN
B	= BLUE RF NOTICE 2 SIGN
Y	= YELLOW RF CAUTION 2 SIGN

NOTE:
RF SIGNS ARE NOT REQUIRED PER THE SITESAFE SITE COMPLIANCE REPORT DATED 01/15/2020.

NOTES:

1. ROOF CONSTRUCTION: BALLASTED ROOFING MEMBRANE ON CONCRETE SLAB, BEAMS AND COLUMNS
2. ELEVATIONS ARE IN REFERENCE TO THE ENTRANCE LEVEL WHICH IS TAKEN AS REFERENCE ELEV. 0.0'
3. SEE SHEETS E-1 THRU E-3 FOR UTILITY AND GROUNDING DETAILS
4. SEE NOTES ON SHEET N-1 FOR INFO NOT NOTED.
5. VERIFY EXISTING COLUMN LOCATIONS PRIOR TO FABRICATING STEEL FRAME.
6. PROPOSED SCREENED PLATFORM TO MATCH EXISTING BUILDING FACADE IN COLOR AND TEXTURE.
7. TOTAL PROPOSED AT&T LEASE AREA = 712 SF.

DCRA

SEAL:

DISTRICT OF COLUMBIA
CAMILLE F. SHABSHAB
10657
REGISTERED PROFESSIONAL ENGINEER

I AM RESPONSIBLE FOR DETERMINING THAT THE ENGINEERING DESIGNS INCLUDED IN THIS APPLICATION ARE IN COMPLIANCE WITH ALL RELEVANT LAWS AND REGULATIONS OF THE DISTRICT OF COLUMBIA. I HAVE PERSONALLY PREPARED, OR DIRECTLY SUPERVISED THE PREPARATION OF, THE ENGINEERING DESIGNS INCLUDED IN THIS APPLICATION

entrex communication services, inc.
6600 Rockledge Drive, Suite 550
Bethesda, MD 20817
PHONE: (202) 408-0960
FAX: (202) 408-0961

at&t
7150 STANDARD DRIVE
HANOVER, MD 21076

smartlink
1362 MELLON RD, STE 140
HANOVER, MD 21076
PHONE: (410) 582-8043
FAX: (410) 221-2962

PROJECT NO: 1152.400
DESIGNER: TMF
ENGINEER: C.S.
THESE DRAWINGS ARE FORMATTED TO BE FULL-SIZE AT 22"X34"
0 1/2 1
GRAPHIC SCALE IN INCHES

FA NUMBER: 15140160
SITE ID: 2874
RASIKA
616 E STREET NW
WASHINGTON, D.C. 20004

SUBMITTALS

DATE	DESCRIPTION	REVISION
04-22-2020	ADDITIONAL REDLINES	1
11-09-2020	REVISE POWER SOURCE	2
11-11-2020	COMMENTS	3
04-19-2021	EXPAND ANTENNA EMCLOSURE / ANTENNA CLEARANCES	4
08-23-2021	ADD ANTENNA ENCLOSURE STAIRS & UPDATE DC9'S	5

TITLE:

ROOF AND EQUIPMENT LOCATION PLAN

SHEET NUMBER:

A-1

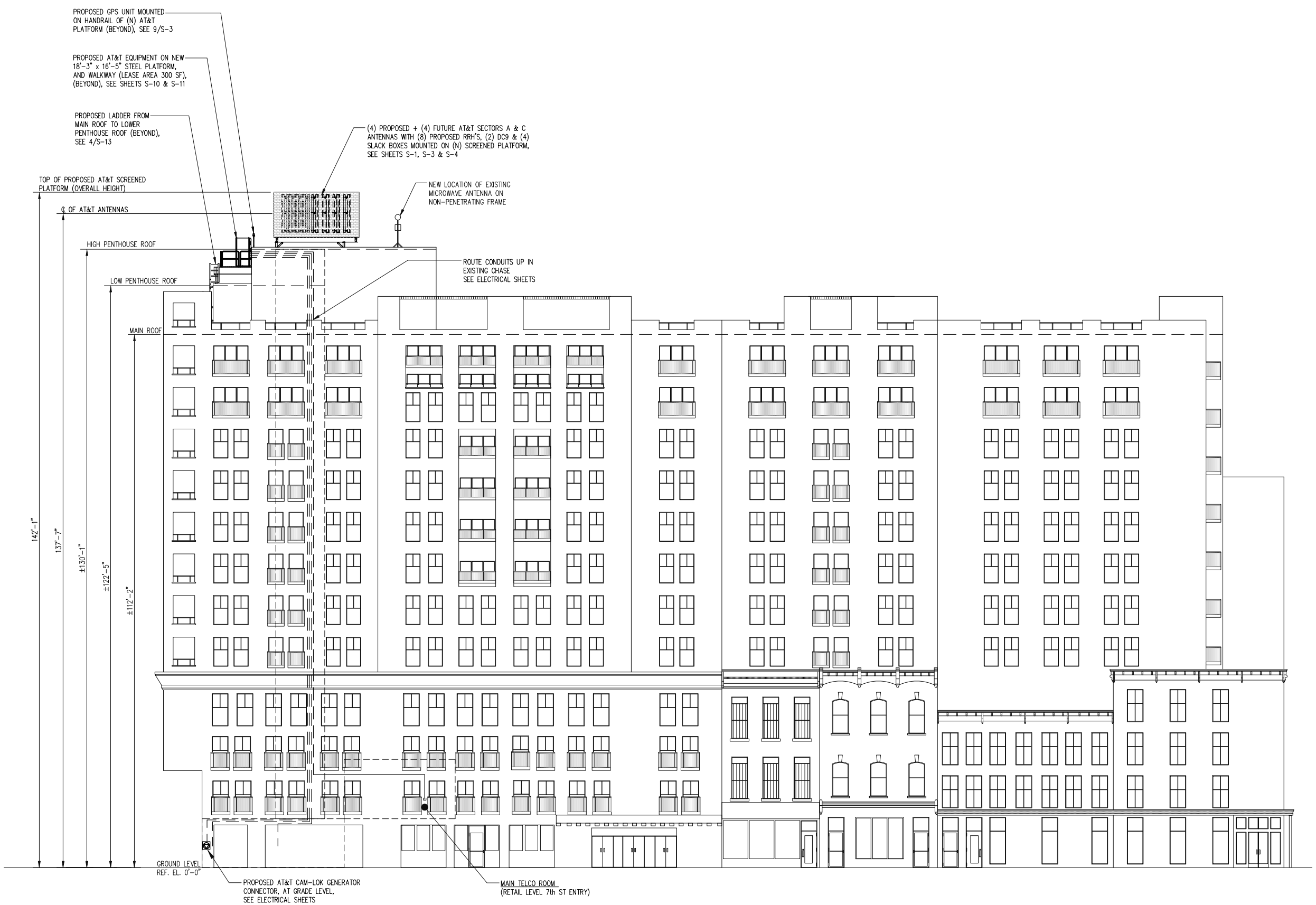

NOTE:

1. PROPOSED SCREENED PLATFORM TO MATCH EXISTING BUILIND FACADE IN COLOR AND TEXTURE.

NORTH BUILDING ELEVATION

SCALE: 3/32"=1'-0"

1 / A-2

DCRA

SEAL:

DISTRICT OF COLUMBIA
CAMILLE F. SHABSHAB
10657
PROFESSIONAL ENGINEER
REGISTERED

I AM RESPONSIBLE FOR DETERMINING THAT THE ENGINEERING DESIGNS INCLUDED IN THIS APPLICATION ARE IN COMPLIANCE WITH ALL RELEVANT LAWS AND REGULATIONS OF THE DISTRICT OF COLUMBIA. I HAVE PERSONALLY PREPARED, OR DIRECTLY SUPERVISED THE PREPARATION OF, THE ENGINEERING DESIGNS INCLUDED IN THIS APPLICATION

entrex
communication services, inc.
6600 Rockledge Drive, Suite 550
Bethesda, MD 20817
PHONE: (202) 408-0960
FAX: (202) 408-0961

at&t
7150 STANDARD DRIVE
HANOVER, MD 21076

smartlink
1362 MELLON RD, STE 140
HANOVER, MD 21076
PHONE: (410) 582-8043
FAX: (410) 221-2962

PROJECT NO: 1152.400
DESIGNER: TMF
ENGINEER: C.S.

THESE DRAWINGS ARE FORMATTED TO BE FULL-SIZE AT 22"X34"
0 1/2 1
GRAPHIC SCALE IN INCHES

FA NUMBER: 15140160
SITE ID: 2874
RASIKA
616 E STREET NW
WASHINGTON, D.C. 20004

SUBMITTALS

DATE	DESCRIPTION	REVISION
04-22-2020	ADDITIONAL REDLINES	1
11-09-2020	REVISE POWER SOURCE	2
11-11-2020	COMMENTS	3
04-19-2021	EXPAND ANTENNA EMCLOSURE / ANTENNA CLEARANCES	4
08-23-2021	ADD ANTENNA ENCLOSURE STAIRS & UPDATE DC9'S	5

TITLE:

NORTH BUILDING ELEVATION

SHEET NUMBER:

A-2

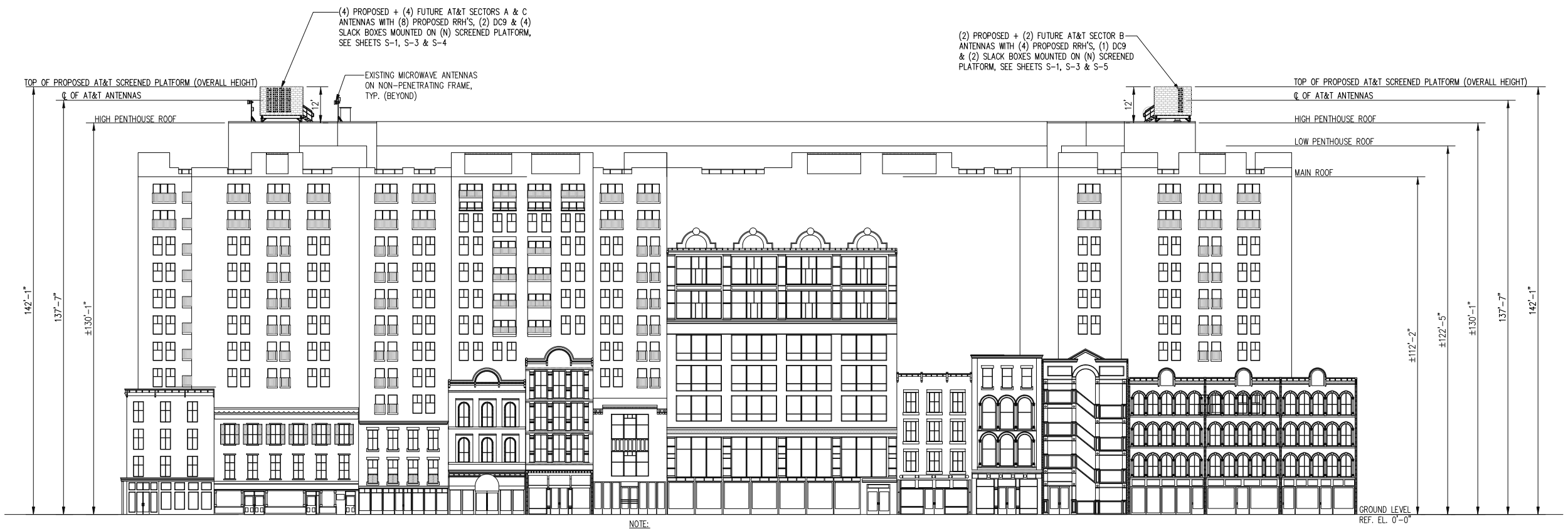

NOTE:

1. PROPOSED SCREENED PLATFORM TO MATCH EXISTING BUILIND FACADE IN COLOR AND TEXTURE.

WEST BUILDING ELEVATION

SCALE: 1"=20'-0"

1 / A-3

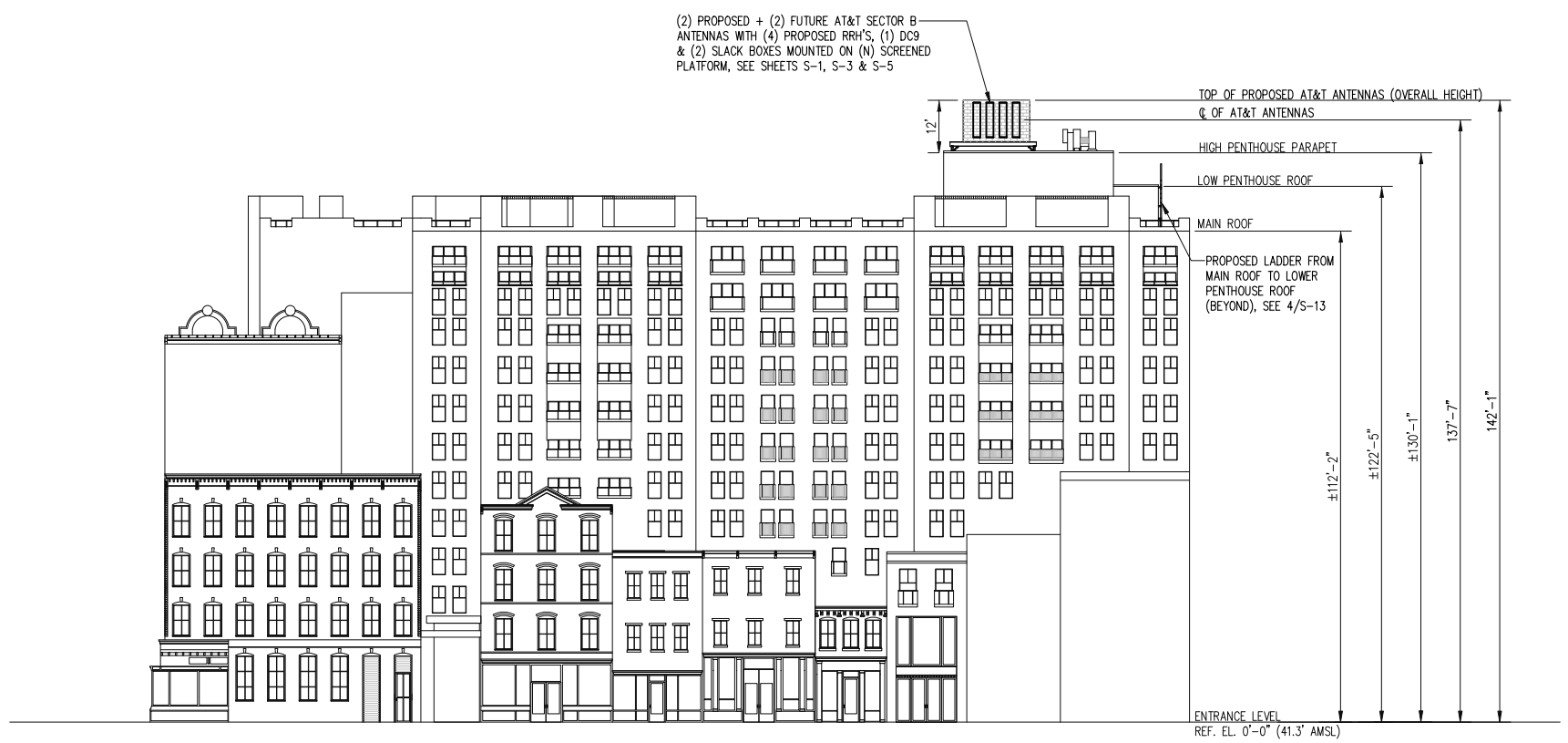

SOUTH BUILDING ELEVATION

SCALE: 1"=20'-0"

2 / A-3

DCRA

SEAL:

DISTRICT OF COLUMBIA
CAMILLE F. SHABSHAB
10657
REGISTERED PROFESSIONAL ENGINEER

I AM RESPONSIBLE FOR DETERMINING THAT THE ENGINEERING DESIGNS INCLUDED IN THIS APPLICATION ARE IN COMPLIANCE WITH ALL RELEVANT LAWS AND REGULATIONS OF THE DISTRICT OF COLUMBIA. I HAVE PERSONALLY PREPARED, OR DIRECTLY SUPERVISED THE PREPARATION OF, THE ENGINEERING DESIGNS INCLUDED IN THIS APPLICATION

entrex
communication services, inc.
6600 Rockledge Drive, Suite 550
Bethesda, MD 20817
PHONE: (202) 408-0960
FAX: (202) 408-0961

at&t
7150 STANDARD DRIVE
HANOVER, MD 21076

smartlink
1362 MELLON RD, STE 140
HANOVER, MD 21076
PHONE: (410) 582-8043
FAX: (410) 221-2962

PROJECT NO:	1152.400
DESIGNER:	TMF
ENGINEER:	C.S.

THESE DRAWINGS ARE FORMATTED TO BE FULL-SIZE AT 22"X34"

0 1/2 1

GRAPHIC SCALE IN INCHES

FA NUMBER: 15140160
SITE ID: 2874
RASIKA
616 E STREET NW
WASHINGTON, D.C. 20004

SUBMITTALS

DATE	DESCRIPTION	REVISION
04-22-2020	ADDITIONAL REDLINES	1
11-09-2020	REVISE POWER SOURCE	2
11-11-2020	COMMENTS	3
04-19-2021	EXPAND ANTENNA EMCLOSURE / ANTENNA CLEARANCES	4
08-23-2021	ADD ANTENNA ENCLOSURE STAIRS & UPDATE DC9'S	5

TITLE:

WEST & SOUTH BUILDING ELEVATIONS

SHEET NUMBER:

A-3

CABLE SCHEDULE AND RF SYSTEM DESIGN PLAN

SECTOR	ANTENNA POSITION	ANTENNA STATUS	TECHNOLOGY/ FREQUENCY	MAKE	MODEL	RAD CTR. FT. AGL	AZIMUTH	ELECTRICAL DOWNTILT	MECHANICAL DOWNTILT	RRH/TMA QUANTITY AND MODEL	TRANSMISSION CABLE CABLE LENGTH	JUMPER LENGTH	STATUS	QUANTITY	TYPE
1	#1	FUTURE		FUTURE	FUTURE										
	#2	NEW	LTE 700	COMMSCOPE	NNHH-65C-R4	137'-7"	60°	4°	0°	(1) NOKIA B14/12/29 TRIBAND RRH AHLBBA	±160'	±35'	NEW	6	FIBER
			LTE 700					4°							
			LTE 700					4°							
			LTE 1900					2°		(1)AIRSCALE DUAL RRH 4T4R B25/66 320W AHFIB					
			LTE AWS					2°							
			LTE AWS					2°							
	#3	FUTURE		FUTURE	FUTURE										
	#4	NEW	5G 850	COMMSCOPE	NNHH-65C-R4	137'-7"	60°	4°	0°	(1)AIRSCALE RRH 4T4R B5 160W AHCA	±160'	±35'	NEW	2	FIBER
			LTE WCS					2°		(1)AIRSCALE RRH 4T4R B30 100W AHNA					
2	#5	FUTURE		FUTURE	FUTURE										
	#6	NEW	LTE 700	COMMSCOPE	NNHH-65C-R4	137'-7"	180°	4°	0°	(1) NOKIA B14/12/29 TRIBAND RRH AHLBBA	±160'	±10'	NEW	6	FIBER
			LTE 700					4°							
			LTE 700					4°							
			LTE 1900					2°		(1)AIRSCALE DUAL RRH 4T4R B25/66 320W AHFIB					
			LTE AWS					2°							
			LTE AWS					2°							
	#7	FUTURE		FUTURE	FUTURE										
	#8	NEW	5G 850	COMMSCOPE	NNHH-65C-R4	137'-7"	180°	4°	0°	(1)AIRSCALE RRH 4T4R B5 160W AHCA	±160'	±10'	NEW	2	FIBER
			LTE WCS					2°		(1)AIRSCALE RRH 4T4R B30 100W AHNA					
3	#9	FUTURE		FUTURE	FUTURE										
	#10	NEW	LTE 700	COMMSCOPE	NNHH-65C-R4	137'-7"	320°	4°	0°	(1) NOKIA B14/12/29 TRIBAND RRH AHLBBA	±285'	±35'	NEW	6	FIBER
			LTE 700					4°							
			LTE 700					4°							
			LTE 1900					2°		(1)AIRSCALE DUAL RRH 4T4R B25/66 320W AHFIB					
			LTE AWS					2°							
			LTE AWS					2°							
	#11	FUTURE		FUTURE	FUTURE										
	#12	NEW	5G 850	COMMSCOPE	NNHH-65C-R4	137'-7"	320°	4°	0°	(1)AIRSCALE RRH 4T4R B5 160W AHCA	±285'	±35'	NEW	2	FIBER
			LTE WCS					2°		(1)AIRSCALE RRH 4T4R B30 100W AHNA					
GPS											±30'		NEW	1	1/2"

TOTAL # OF ANTENNAS: 6 (2 PER SECTOR)	TOTAL # OF RRH'S = 12 (4 PER SECTOR): AIRSCALE RRH 4T4R B12/14/B29 370W AHLBBA, (1 PER SECTOR) AIRSCALE DUAL RRH 4T4R B25/66 320W AHFIB, (1 PER SECTOR) AIRSCALE RRH 4T4R B5 160W AHCA, (1 PER SECTOR) AIRSCALE RRH 4T4R B30 100W AHNA, (1 PER SECTOR)	TOTAL # OF FUTURE ANTENNAS = 6 (2 PER SECTOR): TOTAL # OF FUTURE RRHS = 0

NEW EQUIPMENT: YES EQUIPMENT PLATFORM SIZE: 18'-3" x 16'-5"

NOTES:
1. SUBCONTRACTOR SHALL COORDINATE COLOR CODING WITH THE MASTER COLOR CODE DOCUMENT.
2. INSTALL SURGE ARRESTORS ON NEW MAIN COAXIAL CABLES. GROUND TO NEAREST GROUND BAR.
3. SUB CONTRACTOR SHALL INSTALL A BRASS IDENTIFICATION TAG (1 1/2" IN DIAMETER WITH 1/4" STAMPED LETTERS AND NUMBERS. ONE AT THE ANTENNA PORT CONNECTION NEAR THE END OF THE JUMPER AND ONE ON EACH END OF THE JUMPER SERVING THE RADIO EQUIPMENT. EACH TAG WILL BE STAMPED WITH "ATT" AND THE ANTENNA PORT IDENTIFICATION NUMBER. TAGS SHALL BE ATTACHED WITH CORROSION PROOF UV RESISTANT WIRE OR CABLE-TY.

RF DESIGN NOTE:
This Antenna and Coax Cable schedule has been created using the RFDS dated 02-03-2020 Revision V1.00. All antenna design, zoning, structural analysis, permits and compliance submissions are coordinated with the fore mentioned document.

DCRA

SEAL:

DISTRICT OF COLUMBIA
CAMILLE F. SHARSHAR
10657
REGISTERED PROFESSIONAL ENGINEER

I AM RESPONSIBLE FOR DETERMINING THAT THE ENGINEERING DESIGNS INCLUDED IN THIS APPLICATION ARE IN COMPLIANCE WITH ALL RELEVANT LAWS AND REGULATIONS OF THE DISTRICT OF COLUMBIA. I HAVE PERSONALLY PREPARED, OR DIRECTLY SUPERVISED THE PREPARATION OF, THE ENGINEERING DESIGNS INCLUDED IN THIS APPLICATION

entrex communication services, inc.
6600 Rockledge Drive, Suite 550
Bethesda, MD 20817
PHONE: (202) 408-0960
FAX: (202) 408-0961

at&t
7150 STANDARD DRIVE
HANOVER, MD 21076

PROJECT NO: 1152.400
DESIGNER: TMF
ENGINEER: C.S.
THESE DRAWINGS ARE FORMATTED TO BE FULL-SIZE AT 22"X34"
0 1/2 1
GRAPHIC SCALE IN INCHES

smartlink
1362 MELLON RD, STE 140
HANOVER, MD 21076
PHONE: (410) 582-8043
FAX: (410) 221-2962

FA NUMBER: 15140160
SITE ID: 2874
RASIKA
616 E STREET NW
WASHINGTON, D.C. 20004

SUBMITTALS

DATE	DESCRIPTION	REVISION
04-22-2020	ADDITIONAL REDLINES	1
11-09-2020	REVISE POWER SOURCE	2
11-11-2020	COMMENTS	3
04-19-2021	EXPAND ANTENNA EMCLOSURE / ANTENNA CLEARANCES	4
08-23-2021	ADD ANTENNA ENCLOSURE STAIRS & UPDATE DC9'S	5

TITLE:

ANTENNA SCHEDULE

SHEET NUMBER:

S-1

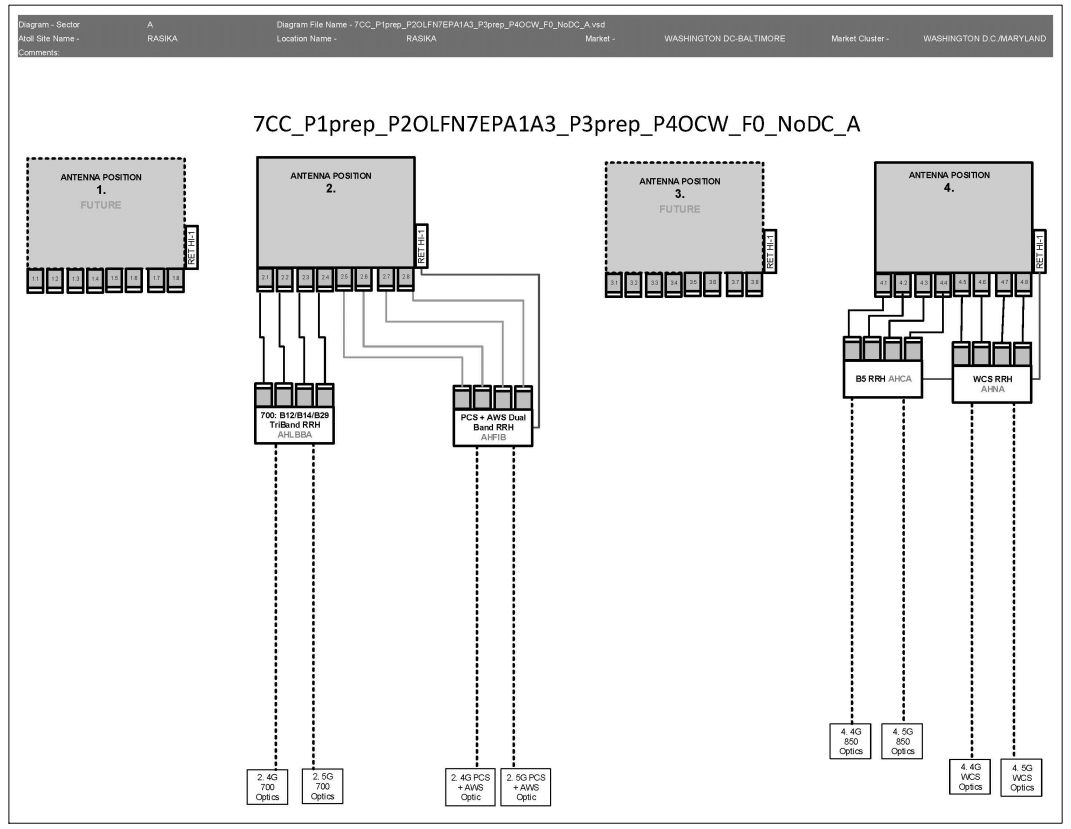

SECTOR A

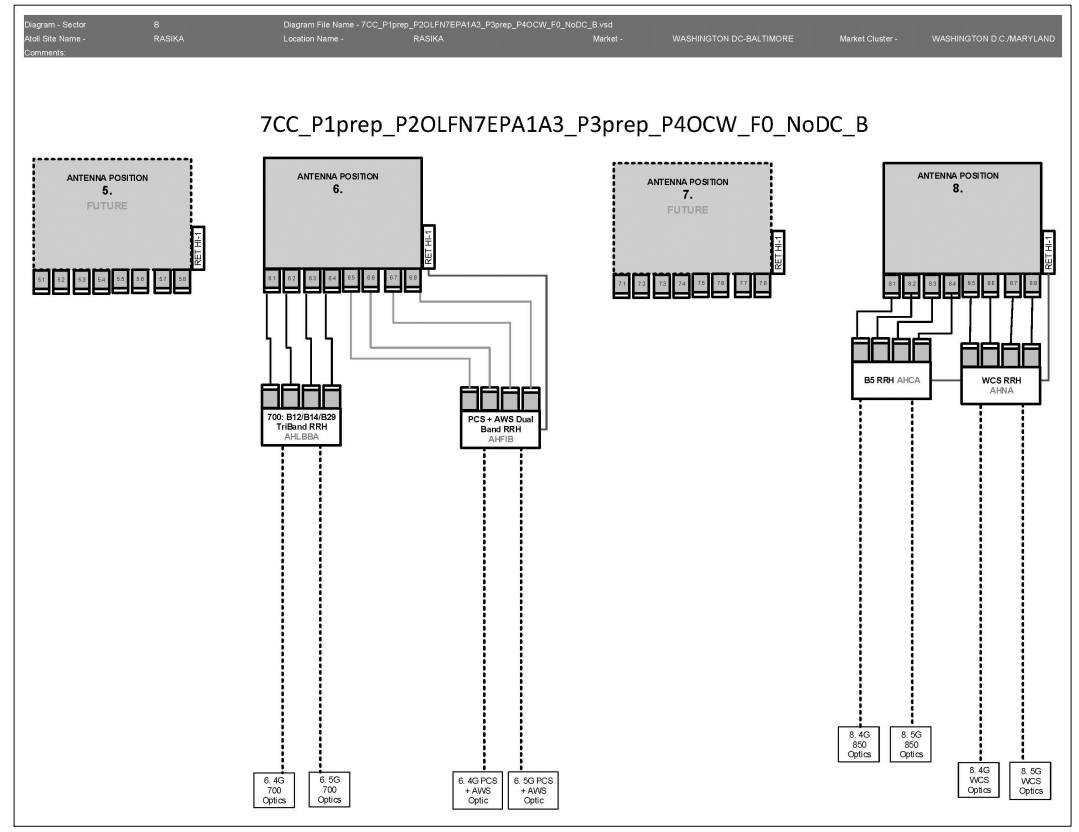

SECTOR B

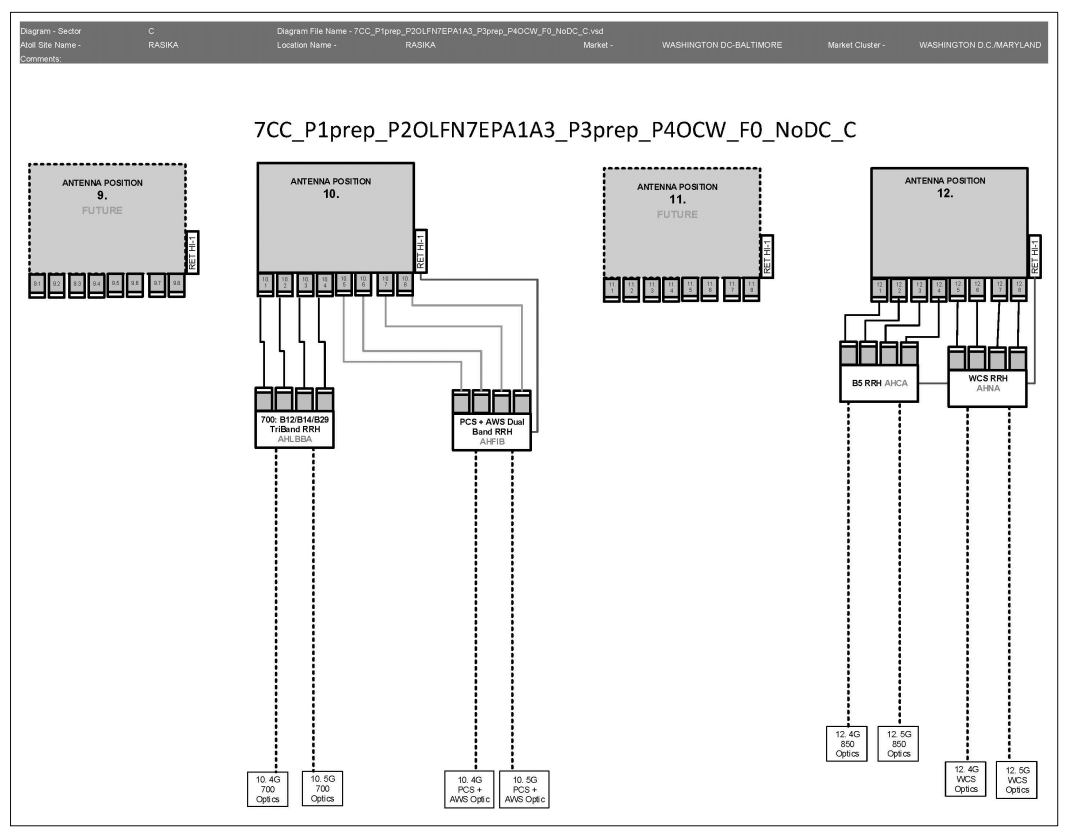

SECTOR C

BASED ON RF ENGINEERING DESIGN ENTITLED "WASHINGTON-D.C.-MARYLAND_WASHINGTON-DC-BALTIMORE_RASIKA_2020-New-Site_LTE-6C_sh733y_2251A0SE0V_15140160_280579_02-03-2020_Preliminary-Approved_v1.00.pdf"

RF PLUMBING DIAGRAM
SCALE: N.T.S.
1
S-2

DCRA

SEAL:

DISTRICT OF COLUMBIA
CAMILLE F. SHABAHAN
10657
REGISTERED PROFESSIONAL ENGINEER

I AM RESPONSIBLE FOR DETERMINING THAT THE ENGINEERING DESIGNS INCLUDED IN THIS APPLICATION ARE IN COMPLIANCE WITH ALL RELEVANT LAWS AND REGULATIONS OF THE DISTRICT OF COLUMBIA. I HAVE PERSONALLY PREPARED, OR DIRECTLY SUPERVISED THE PREPARATION OF, THE ENGINEERING DESIGNS INCLUDED IN THIS APPLICATION

entrex
communication services, inc.
6600 Rockledge Drive, Suite 550
Bethesda, MD 20817
PHONE: (202) 408-0960
FAX: (202) 408-0961

at&t
7150 STANDARD DRIVE
HANOVER, MD 21076

smartlink
1362 MELLON RD, STE 140
HANOVER, MD 21076
PHONE: (410) 582-8043
FAX: (410) 221-2962

PROJECT NO: 1152.400
DESIGNER: TMF
ENGINEER: C.S.

THESE DRAWINGS ARE FORMATTED TO BE FULL-SIZE AT 22"X34"
0 1/2 1
GRAPHIC SCALE IN INCHES

FA NUMBER: 15140160
SITE ID: 2874
RASIKA
616 E STREET NW
WASHINGTON, D.C. 20004

SUBMITTALS

DATE	DESCRIPTION	REVISION
04-22-2020	ADDITIONAL REDLINES	1
11-09-2020	REVISE POWER SOURCE	2
11-11-2020	COMMENTS	3
04-19-2021	EXPAND ANTENNA EMCLOSURE / ANTENNA CLEARANCES	4
08-23-2021	ADD ANTENNA ENCLOSURE STAIRS & UPDATE DC9'S	5

TITLE:

RF PLUMBING DIAGRAM

SHEET NUMBER:

S-2

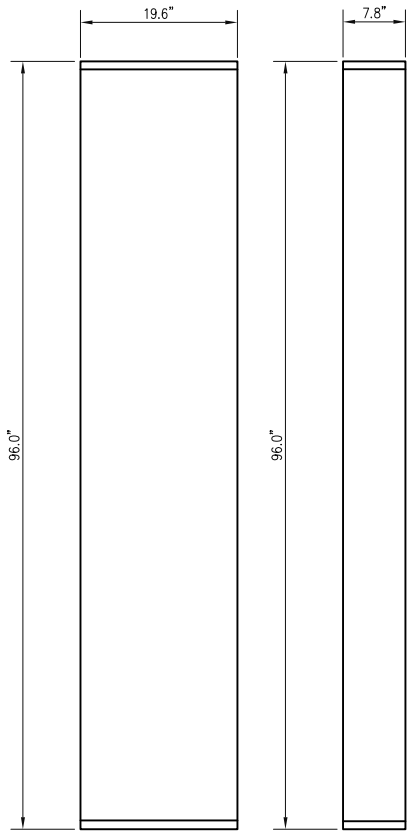

ANTENNA MODEL:
COMMSCOPE NNH4-65C-R4
SIZE: 96.0" H x 19.6" W x 7.8" D)
WEIGHT: 99.2 LBS
(W/O MOUNTING HARDWARE)

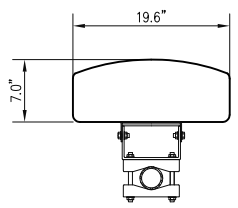

FRONT VIEW SIDE VIEW TOP VIEW

COMMSCOPE NNH4-65C-R4 ANTENNA DETAIL

SCALE: 1"=1'-0"

1 S-3

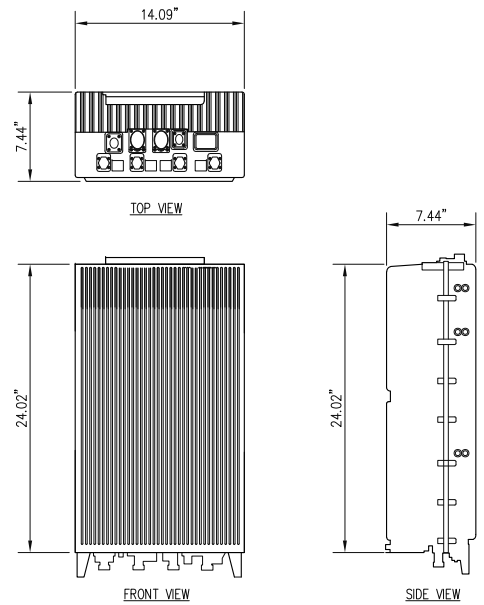

NOTE: DIMENSIONS/WEIGHT WITH DC SOLAR COVER.
WEIGHT: 101.4 LBS. (W/ MOUNTING HARDWARE)

NOKIA AIRSCALE TRIBAND RRH 4T4R B14/12/B29 370W AHLBBA

SCALE: 1-1/2"= 1'-0"

2 S-3

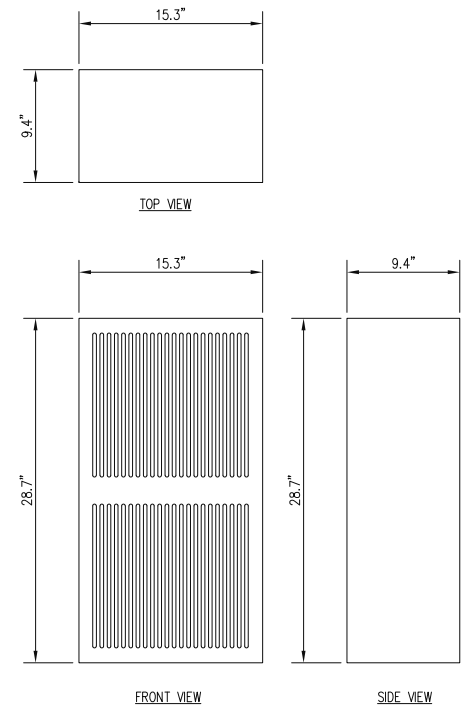

NOTE: DIMENSIONS/WEIGHT WITH DC SOLAR COVER.
WEIGHT: 88 LBS. (W/ MOUNTING HARDWARE)

NOKIA AIRSCALE DUAL RRH 4T4R B25/66 320W AHFIB

SCALE: 1-1/2"= 1'-0"

3 S-3

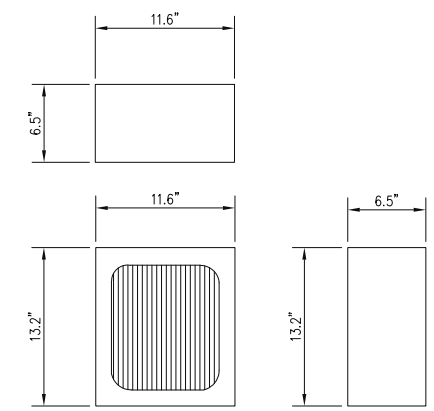

NOTE: DIMENSIONS/WEIGHT WITH DC SOLAR COVER.
WEIGHT: 35 LBS. (W/ MOUNTING HARDWARE)

NOKIA AIRSCALE RRH 4T4R B5 160W AHCA

SCALE: 1-1/2"= 1'-0"

4 S-3

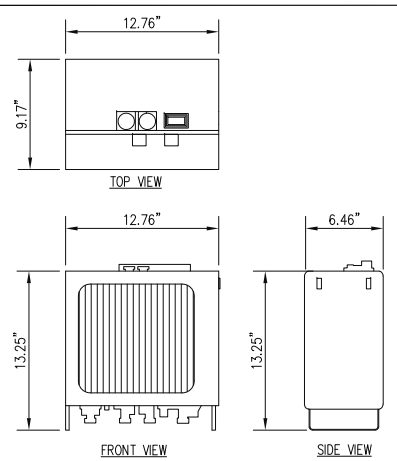

AIRSCALE RRH 4T4R B30 100W AHNA

SCALE: 1-1/2"= 1'-0"

5 S-3

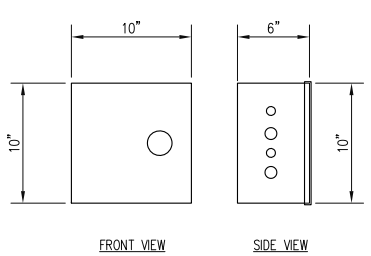

DISTRIBUTION BOX/ SLACK BOX HOFFMAN AHE10X10X6

SCALE: 1-1/2"= 1'-0"

6 S-3

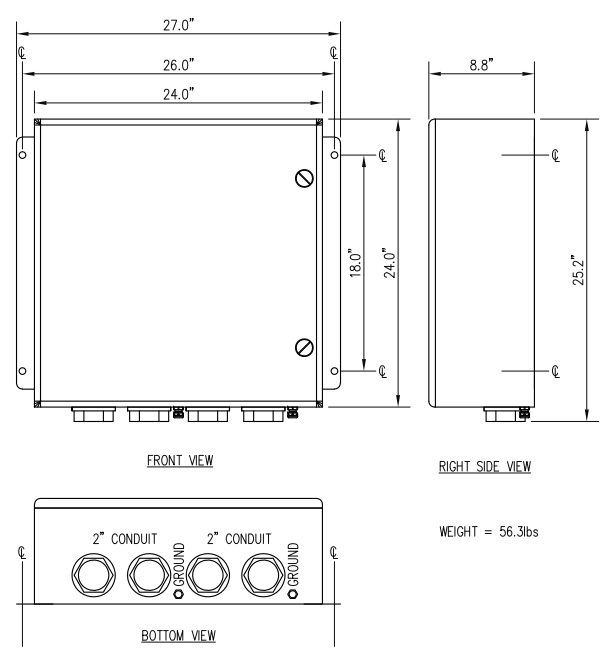

WEIGHT = 56.3lbs

OVERVOLTAGE PROTECTION & POWER MANAGEMENT JUNCTION BOX DC12-48-60-0-25E

SCALE: 1-1/2"= 1'-0"

7 S-3

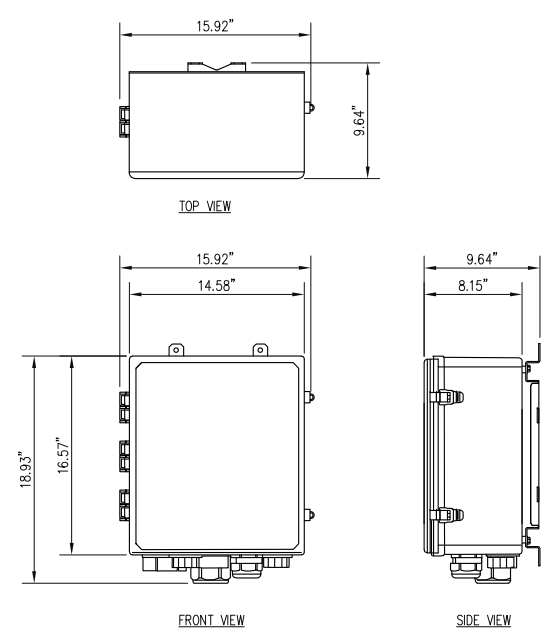

WEIGHT : 34.9 LBS

RAYCAP DC9-48-60-24-PC16-EV

SCALE: N.T.S.

8 S-3

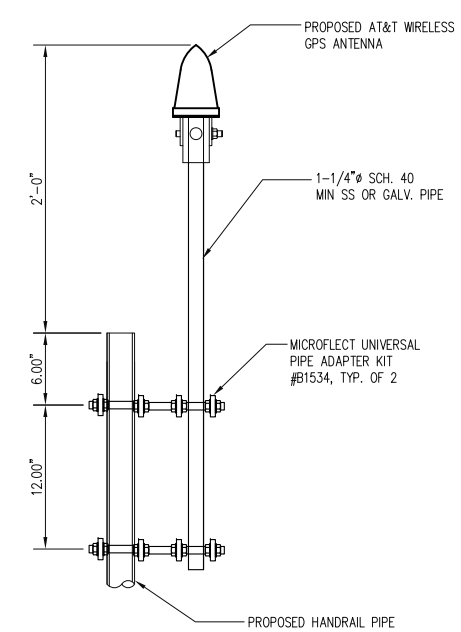

GPS MOUNTING DETAIL

SCALE: 1-1/2"=1'-0"

9 S-3

DCRA

SEAL:

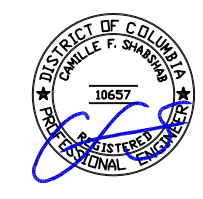

I AM RESPONSIBLE FOR DETERMINING THAT THE ENGINEERING DESIGNS INCLUDED IN THIS APPLICATION ARE IN COMPLIANCE WITH ALL RELEVANT LAWS AND REGULATIONS OF THE DISTRICT OF COLUMBIA. I HAVE PERSONALLY PREPARED, OR DIRECTLY SUPERVISED THE PREPARATION OF, THE ENGINEERING DESIGNS INCLUDED IN THIS APPLICATION

entrex communication services, inc.
6600 Rockledge Drive, Suite 550
Bethesda, MD 20817
PHONE: (202) 408-0960
FAX: (202) 408-0961

at&t
7150 STANDARD DRIVE
HANOVER, MD 21076

smartlink
1362 MELLON RD, STE 140
HANOVER, MD 21076
PHONE: (410) 582-8043
FAX: (410) 221-2962

PROJECT NO:	1152.400
DESIGNER:	TMF
ENGINEER:	C.S.

THESE DRAWINGS ARE FORMATTED TO BE FULL-SIZE AT 22"X34"
0 1/2 1
GRAPHIC SCALE IN INCHES

FA NUMBER: 15140160
SITE ID: 2874
RASIKA
616 E STREET NW
WASHINGTON, D.C. 20004

SUBMITTALS

DATE	DESCRIPTION	REVISION
04-22-2020	ADDITIONAL REDLINES	1
11-09-2020	REVISE POWER SOURCE	2
11-11-2020	COMMENTS	3
04-19-2021	EXPAND ANTENNA EMCLOSURE / ANTENNA CLEARANCES	4
08-23-2021	ADD ANTENNA ENCLOSURE STAIRS & UPDATE DC9'S	5

TITLE:

ANTENNA AND RRH DETAILS

SHEET NUMBER:

S-3

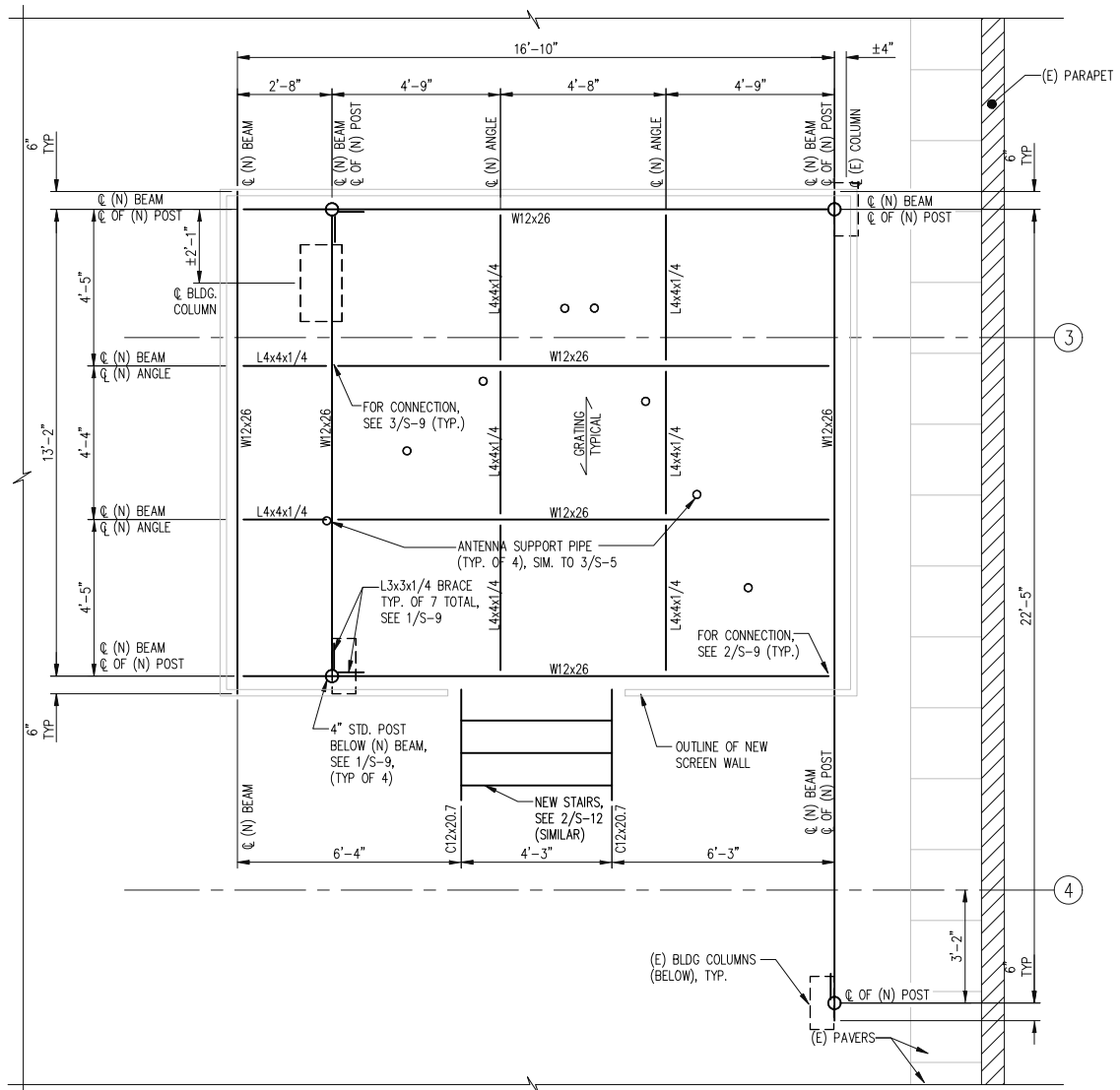

ANTENNA SUPPORT FRAME PLAN - 1 (SECTORS A & C)

SCALE: 3/8"=1'-0"

1/S-4

TRUE NORTH

1. CONTRACTOR SHALL FIELD VERIFY COLUMN LOCATIONS PRIOR TO FABRICATION. (FIELD DETERMINED COLUMN LOCATIONS SHALL BE REPORTED TO THE ENGINEER PRIOR TO FABRICATION (ENTREX COMMUNICATION SERVICES 202-408-0960))
2. THE CONTRACTOR SHALL PREPARE A SET OF STEEL SHOP DRAWINGS FOR REVIEW AND APPROVAL BY THE ENGINEER PRIOR TO ORDERING/FABRICATING STEEL.
3. THE PLATFORM DESIGN LOAD IS 60 PSF. THE STAIR DESIGN LIVE LOAD IS 100 PSF.
4. REFER TO SHEET N-1 FOR STRUCTURAL NOTES.
5. GRATING SHALL BE 1 1/2" X 3/16" BEARING BARS 1 3/16" O.C. AND 1/8" X 3/4" CROSS BARS 4" O.C. SECURE GRATING TO STEEL FRAMING WITH GRATING CLAMPS 18" O.C. GRATING SHALL BE HOT DIP GALVANIZED AND ALL EDGES AND OPENINGS SHALL BE BANDED.
6. THE TOP OF PLATFORM STEEL FRAMING IS 2'-6" ABOVE THE EXISTING ROOF SURFACE. THE CLEARANCE BETWEEN BOTTOM OF STEEL AND ROOF IS 12" - 18".
7. ALL STEEL SHALL BE HOT-DIPPED GALVANIZED. CLEAN WELDED AREAS WITH POWER TOOL. PAINT WELDED AREAS WITH TWO LAYERS OF GALVANIC PAINT.

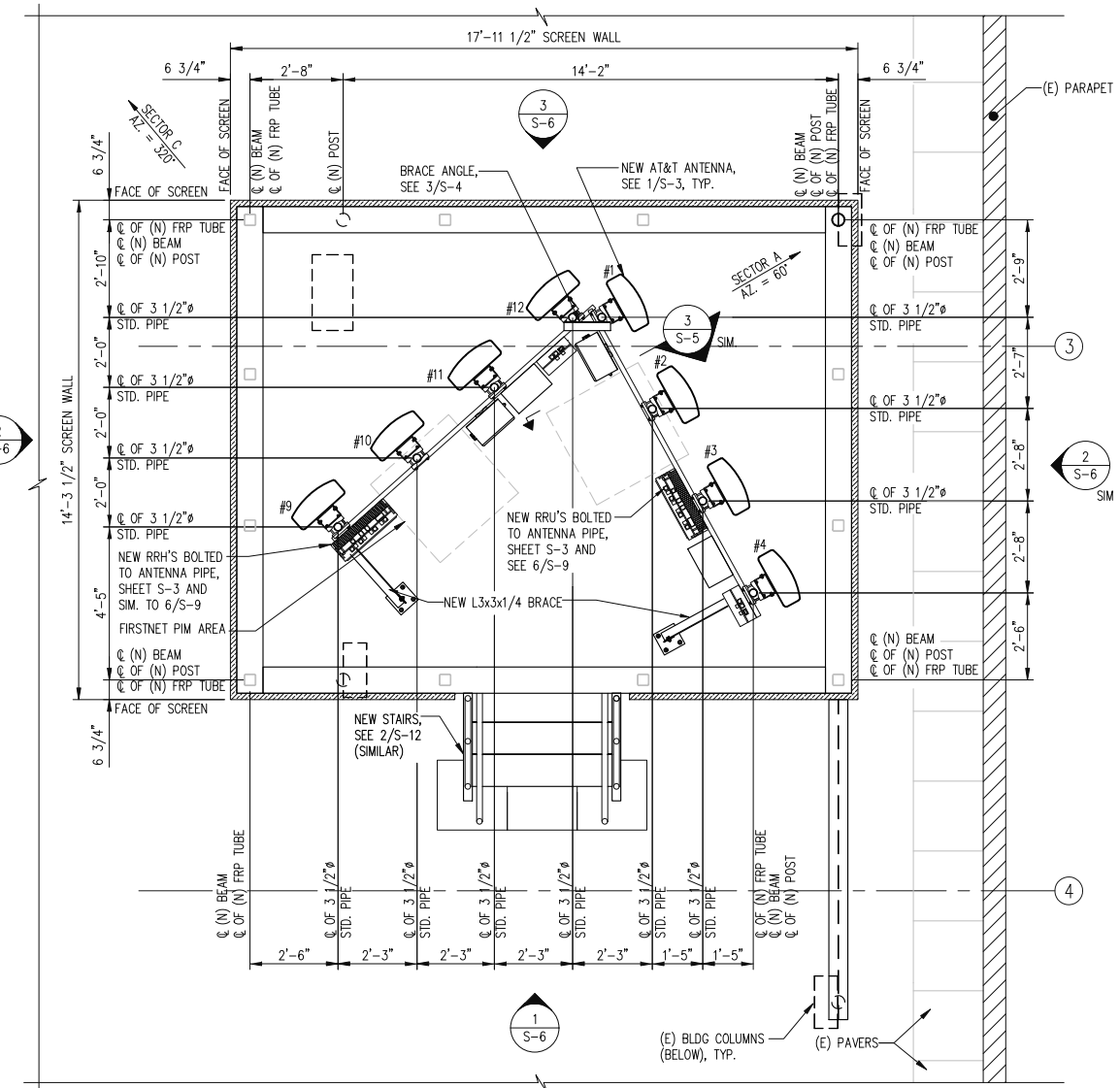

ANTENNA LAYOUT PLAN - 1 (SECTORS A & C)

SCALE: 3/8"=1'-0"

2/S-4

TRUE NORTH

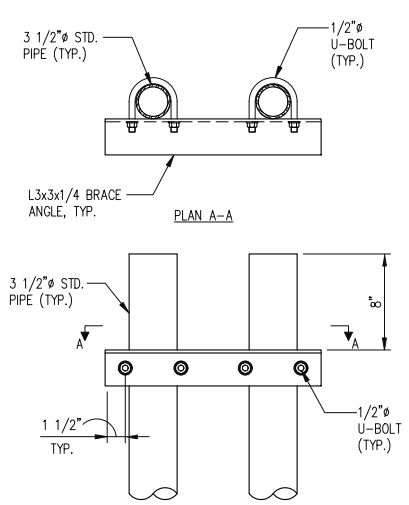

CONNECTION DETAIL

SCALE: 1-1/2"=1'-0"

3/S-4

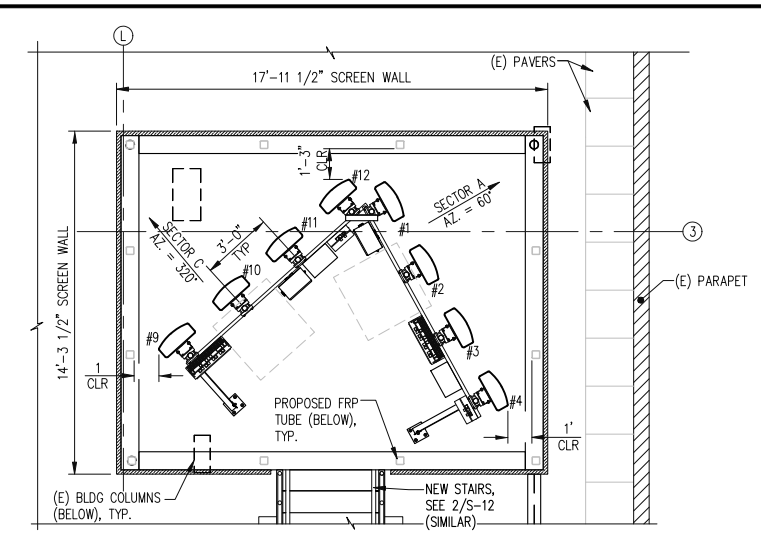

ANTENNA CLEARANCE DISTANCE PLAN - 1 (SECTORS A & C)

SCALE: 1/4"=1'-0"

4/S-4

TRUE NORTH

DCRA

SEAL:

DISTRICT OF COLUMBIA CAMILLE F. SHARBAUGH 10657 REGISTERED PROFESSIONAL ENGINEER

I AM RESPONSIBLE FOR DETERMINING THAT THE ENGINEERING DESIGNS INCLUDED IN THIS APPLICATION ARE IN COMPLIANCE WITH ALL RELEVANT LAWS AND REGULATIONS OF THE DISTRICT OF COLUMBIA. I HAVE PERSONALLY PREPARED, OR DIRECTLY SUPERVISED THE PREPARATION OF, THE ENGINEERING DESIGNS INCLUDED IN THIS APPLICATION

entrex communication services, inc.
6600 Rockledge Drive, Suite 550
Bethesda, MD 20817
PHONE: (202) 408-0960
FAX: (202) 408-0961

at&t
7150 STANDARD DRIVE
HANOVER, MD 21076

PROJECT NO:	1152.400
DESIGNER:	TMF
ENGINEER:	C.S.

THESE DRAWINGS ARE FORMATTED TO BE FULL-SIZE AT 22"X34"

0 1/2 1

GRAPHIC SCALE IN INCHES

smartlink
1362 MELLON RD, STE 140
HANOVER, MD 21076
PHONE: (410) 582-8043
FAX: (410) 221-2962

FA NUMBER: 15140160
SITE ID: 2874
RASIKA
616 E STREET NW
WASHINGTON, D.C. 20004

SUBMITTALS

DATE	DESCRIPTION	REVISION
04-22-2020	ADDITIONAL REDLINES	1
11-09-2020	REVISE POWER SOURCE	2
11-11-2020	COMMENTS	3
04-19-2021	EXPAND ANTENNA EMCLOSURE / ANTENNA CLEARANCES	4
08-23-2021	ADD ANTENNA ENCLOSURE STAIRS & UPDATE DC9'S	5

TITLE:

ANTENNA SUPPORT FRAME AND LAYOUT PLANS (SECTORS A & C)

SHEET NUMBER:

S-4

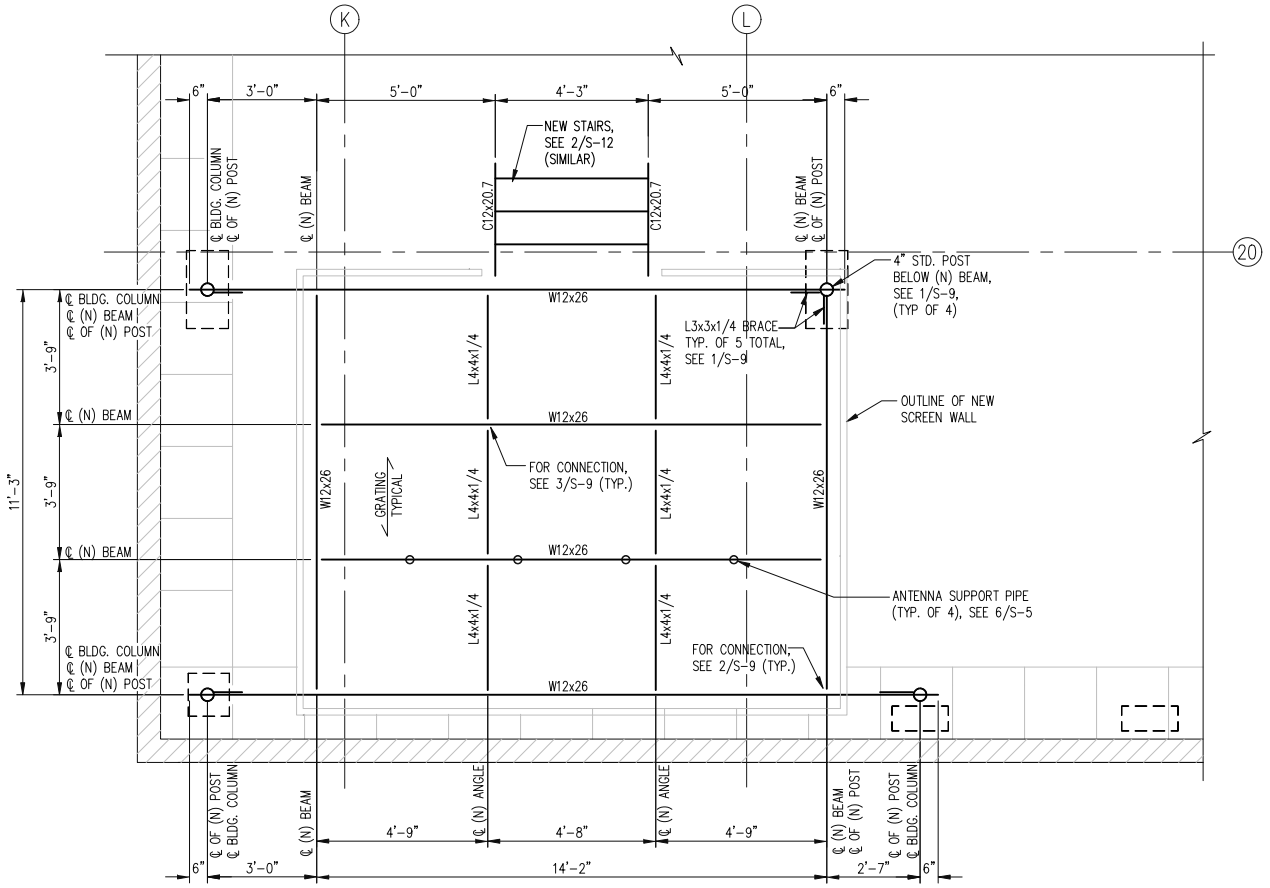

ANTENNA SUPPORT FRAME PLAN - 2 (SECTOR B)

SCALE: 3/8"=1'-0"

1 S-5

TRUE NORTH

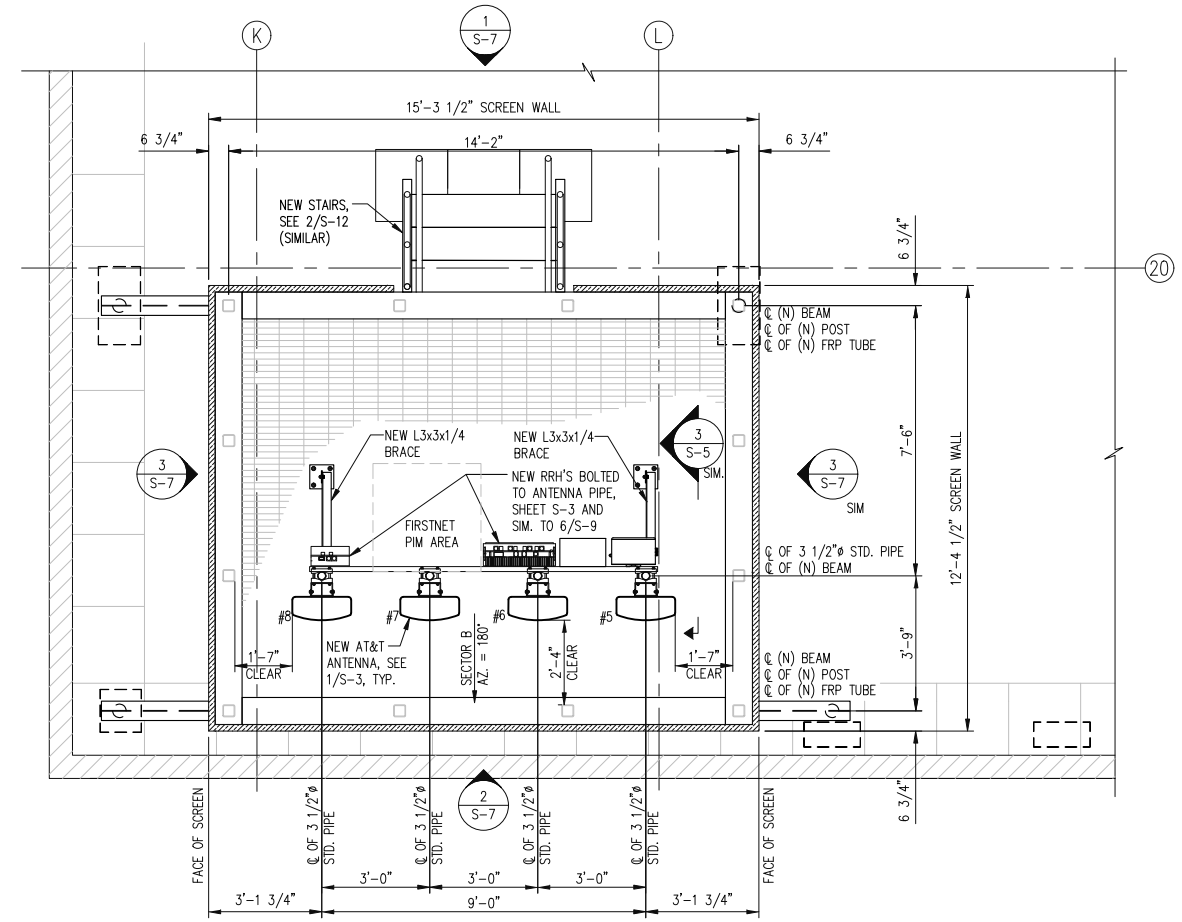

ANTENNA LAYOUT PLAN - 2 (SECTOR B)

SCALE: 3/8"=1'-0"

2 S-5

TRUE NORTH

NOTES:

1. CONTRACTOR SHALL FIELD VERIFY COLUMN LOCATIONS PRIOR TO FABRICATION. (FIELD DETERMINED COLUMN LOCATIONS SHALL BE REPORTED TO THE ENGINEER PRIOR TO FABRICATION (ENTREX COMMUNICATION SERVICES 202-408-0960))
2. THE CONTRACTOR SHALL PREPARE A SET OF STEEL SHOP DRAWINGS FOR REVIEW AND APPROVAL BY THE ENGINEER PRIOR TO ORDERING/FABRICATING STEEL.
3. THE PLATFORM DESIGN LOAD IS 60 PSF. THE STAIR DESIGN LIVE LOAD IS 100 PSF.
4. GRATING SHALL BE 1 1/2" X 3/16" BEARING BARS 1 3/16" O.C. AND 1/8" X 3/4" CROSS BARS 4" O.C. SECURE GRATING TO STEEL FRAMING WITH GRATING CLAMPS 18" O.C. GRATING SHALL BE HOT DIP GALVANIZED AND ALL EDGES AND OPENINGS SHALL BE BANDED.
5. THE TOP OF PLATFORM STEEL FRAMING IS 2'-6" ABOVE THE EXISTING ROOF SURFACE. THE CLEARANCE BETWEEN BOTTOM OF STEEL AND ROOF IS 12" - 18".
6. ALL STEEL SHALL BE HOT-DIPPED GALVANIZED. CLEAN WELDED AREAS WITH POWER TOOL. PAINT WELDED AREAS WITH TWO LAYERS OF GALVANIC PAINT.
7. REFER TO SHEET N-1 FOR STRUCTURAL NOTES.

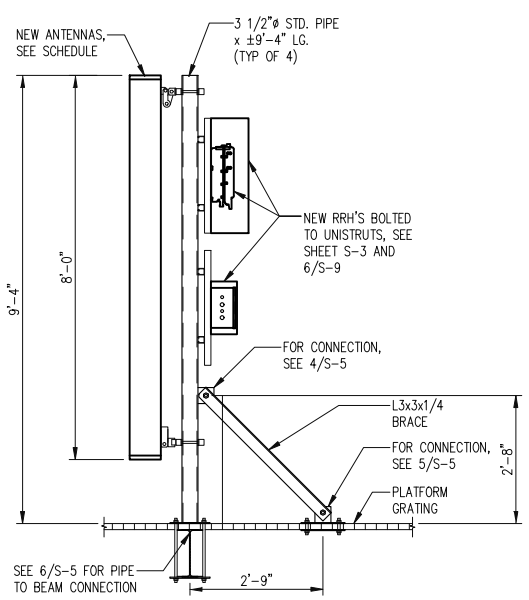

ANTENNA SUPPORT FRAME ELEVATION

SCALE: 1/2"=1'-0"

3 S-5

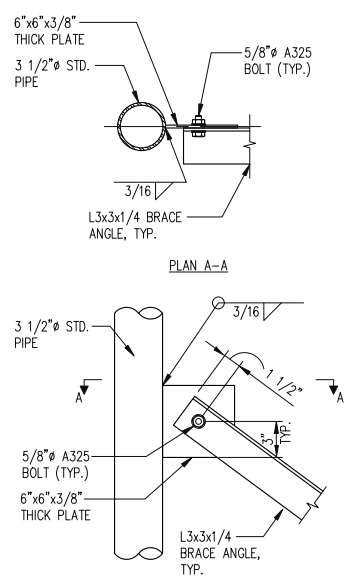

CONNECTION DETAIL

SCALE: 1-1/2"=1'-0"

4 S-5

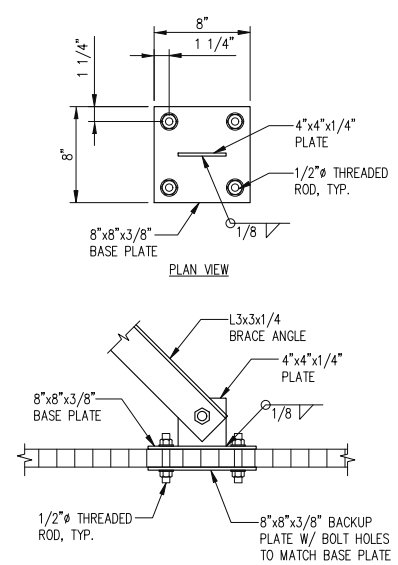

BRACE CONNECTION DETAIL

SCALE: 1-1/2"=1'-0"

5 S-5

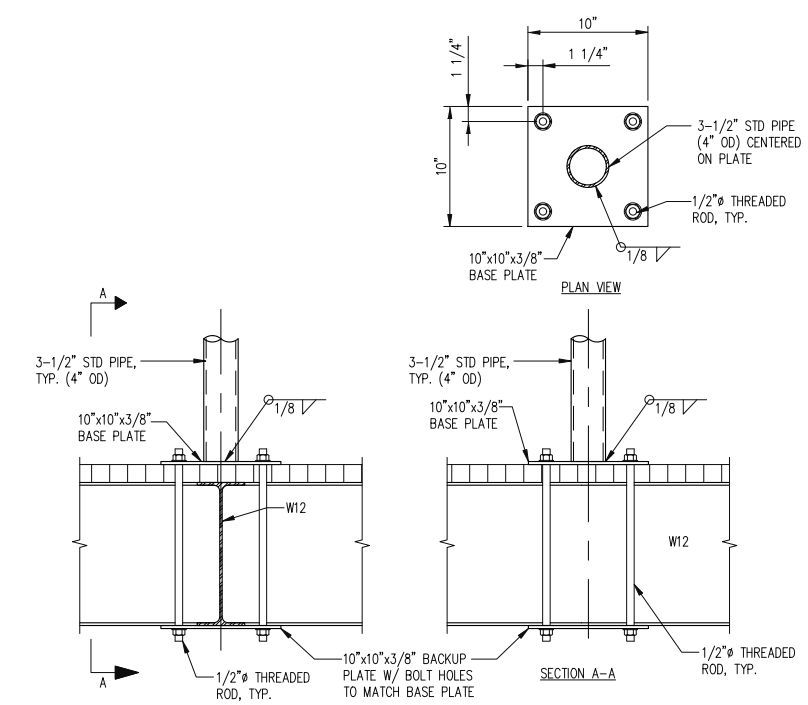

TYPICAL PIPE TO BEAM CONNECTION DETAIL

SCALE: 1-1/2"=1'-0"

6 S-5

DCRA

SEAL:

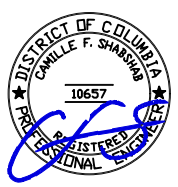

I AM RESPONSIBLE FOR DETERMINING THAT THE ENGINEERING DESIGNS INCLUDED IN THIS APPLICATION ARE IN COMPLIANCE WITH ALL RELEVANT LAWS AND REGULATIONS OF THE DISTRICT OF COLUMBIA. I HAVE PERSONALLY PREPARED, OR DIRECTLY SUPERVISED THE PREPARATION OF, THE ENGINEERING DESIGNS INCLUDED IN THIS APPLICATION

entrex communication services, inc.
6600 Rockledge Drive, Suite 550
Bethesda, MD 20817
PHONE: (202) 408-0960
FAX: (202) 408-0961

at&t
7150 STANDARD DRIVE
HANOVER, MD 21076

smartlink
1362 MELLON RD, STE 140
HANOVER, MD 21076
PHONE: (410) 582-8043
FAX: (410) 221-2962

PROJECT NO:	1152.400
DESIGNER:	TMF
ENGINEER:	C.S.

THESE DRAWINGS ARE FORMATTED TO BE FULL-SIZE AT 22"X34"

0 1/2 1

GRAPHIC SCALE IN INCHES

FA NUMBER: 15140160
SITE ID: 2874
RASIKA
616 E STREET NW
WASHINGTON, D.C. 20004

SUBMITTALS

DATE	DESCRIPTION	REVISION
04-22-2020	ADDITIONAL REDLINES	1
11-09-2020	REVISE POWER SOURCE	2
11-11-2020	COMMENTS	3
04-19-2021	EXPAND ANTENNA EMCLOSURE / ANTENNA CLEARANCES	4
08-23-2021	ADD ANTENNA ENCLOSURE STAIRS & UPDATE DC9'S	5

TITLE:

ANTENNA SUPPORT FRAME AND LAYOUT PLANS (SECTOR B)

SHEET NUMBER:

S-5

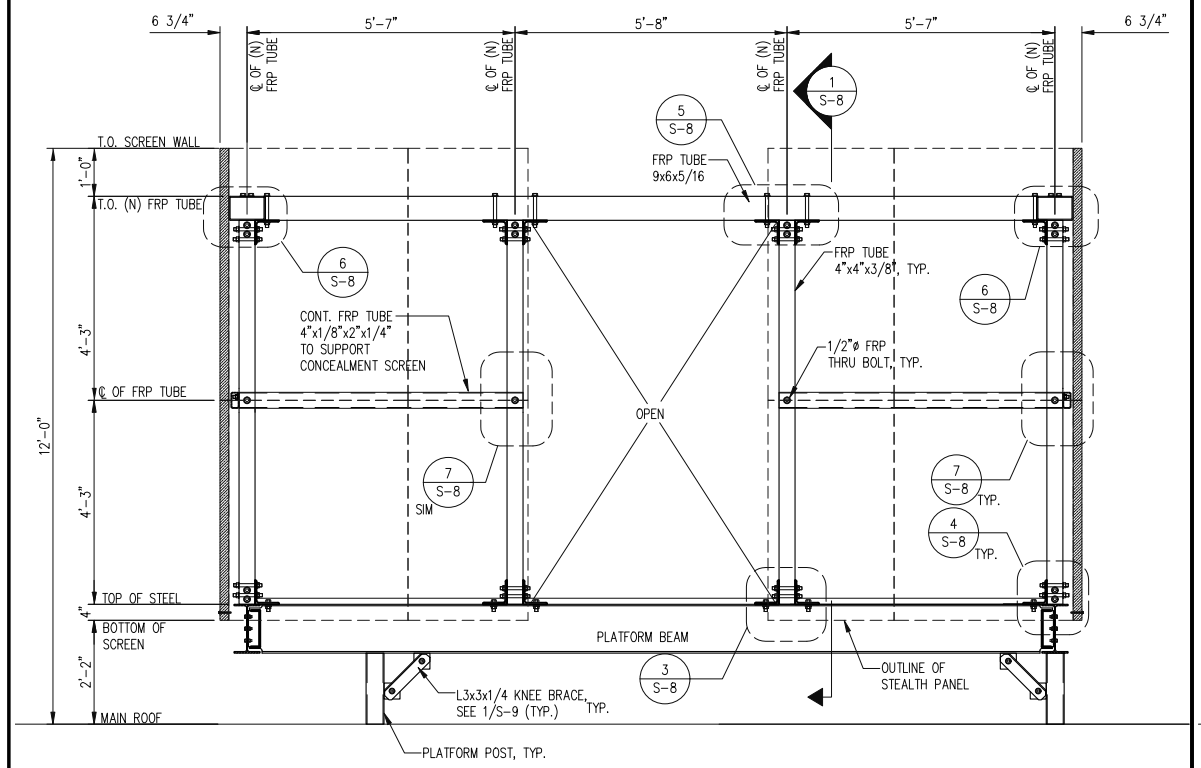

NOTE:
STAIRS NOT SHOWN FOR CLARITY.

ANTENNA PLATFORM ELEVATION - 1 (SECTORS A & C)
SCALE: 1/2" =1'-0"
1 / S-6

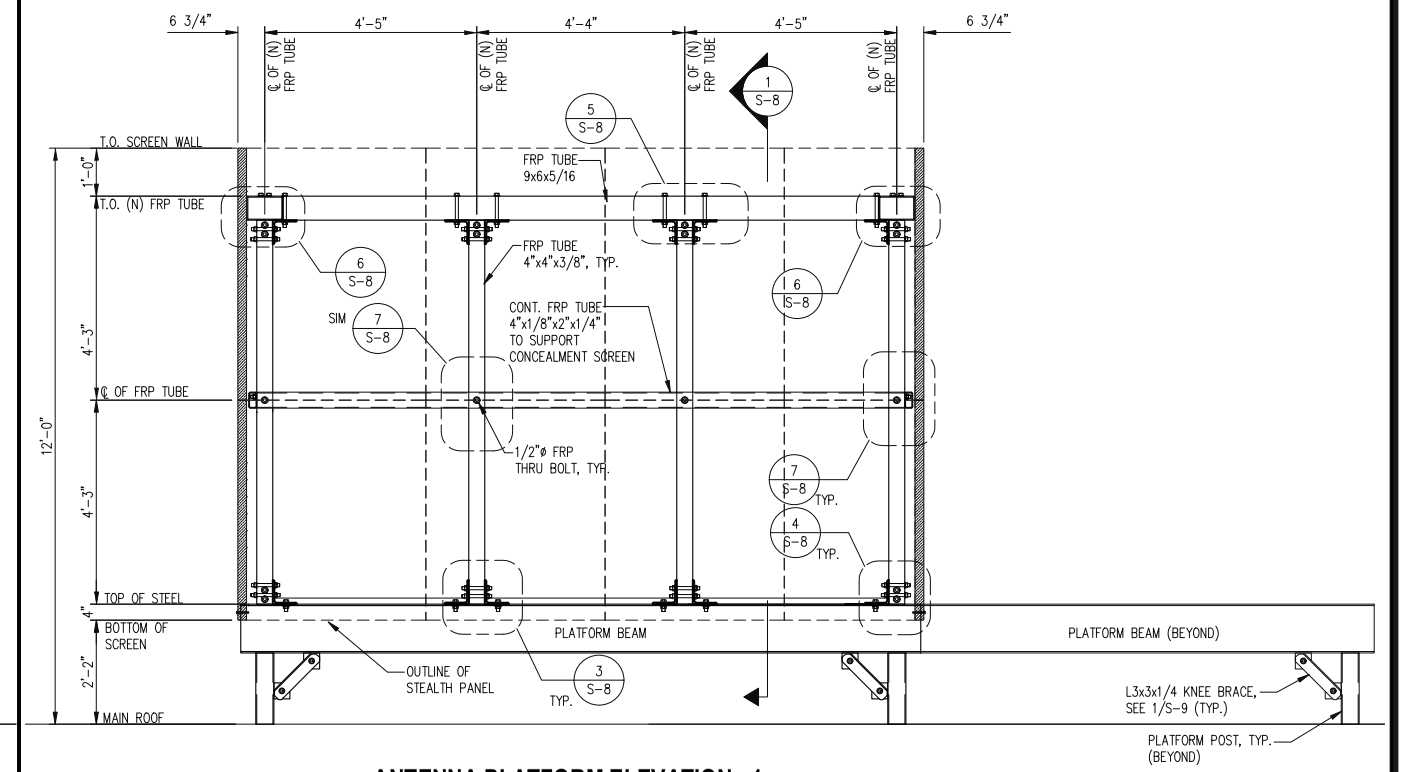

ANTENNA PLATFORM ELEVATION - 1 (SECTORS A & C)
SCALE: 1/2" =1'-0"
2 / S-6

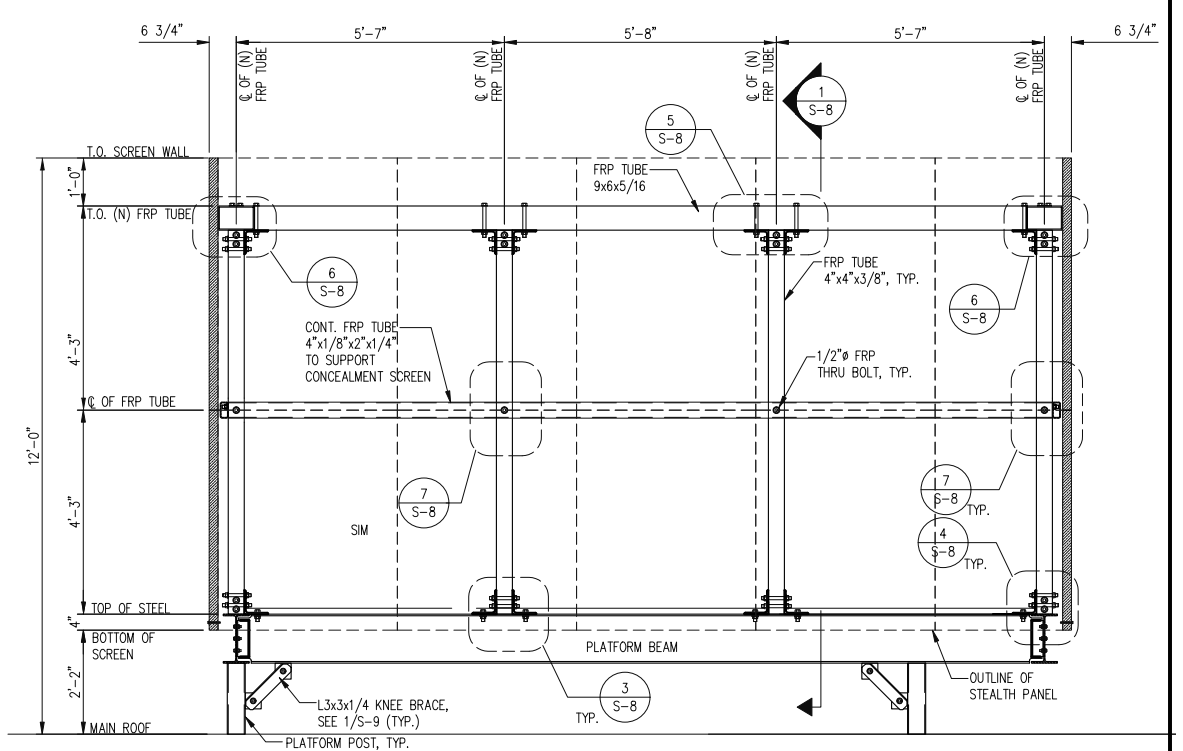

ANTENNA PLATFORM ELEVATION - 1 (SECTORS A & C)
SCALE: 1/2" =1'-0"
3 / S-6

DCRA

SEAL:

DISTRICT OF COLUMBIA
CAMILLE F. SHABSHAB
10657
REGISTERED PROFESSIONAL ENGINEER

I AM RESPONSIBLE FOR DETERMINING THAT THE ENGINEERING DESIGNS INCLUDED IN THIS APPLICATION ARE IN COMPLIANCE WITH ALL RELEVANT LAWS AND REGULATIONS OF THE DISTRICT OF COLUMBIA. I HAVE PERSONALLY PREPARED, OR DIRECTLY SUPERVISED THE PREPARATION OF, THE ENGINEERING DESIGNS INCLUDED IN THIS APPLICATION

entrex communication services, inc.
6600 Rockledge Drive, Suite 550
Bethesda, MD 20817
PHONE: (202) 408-0960
FAX: (202) 408-0961

at&t
7150 STANDARD DRIVE
HANOVER, MD 21076

smartlink
1362 MELLON RD, STE 140
HANOVER, MD 21076
PHONE: (410) 582-8043
FAX: (410) 221-2962

PROJECT NO:	1152.400
DESIGNER:	TMF
ENGINEER:	C.S.

THESE DRAWINGS ARE FORMATTED TO BE FULL-SIZE AT 22"X34"
0 1/2 1
GRAPHIC SCALE IN INCHES

FA NUMBER: 15140160
SITE ID: 2874
RASIKA
616 E STREET NW
WASHINGTON, D.C. 20004

SUBMITTALS

DATE	DESCRIPTION	REVISION
04-22-2020	ADDITIONAL REDLINES	1
11-09-2020	REVISE POWER SOURCE	2
11-11-2020	COMMENTS	3
04-19-2021	EXPAND ANTENNA EMCLOSURE / ANTENNA CLEARANCES	4
08-23-2021	ADD ANTENNA ENCLOSURE STAIRS & UPDATE DC9'S	5

TITLE:

ANTENNA PLATFORM ELEVATIONS (SECTORS A & C)

SHEET NUMBER:

S-6

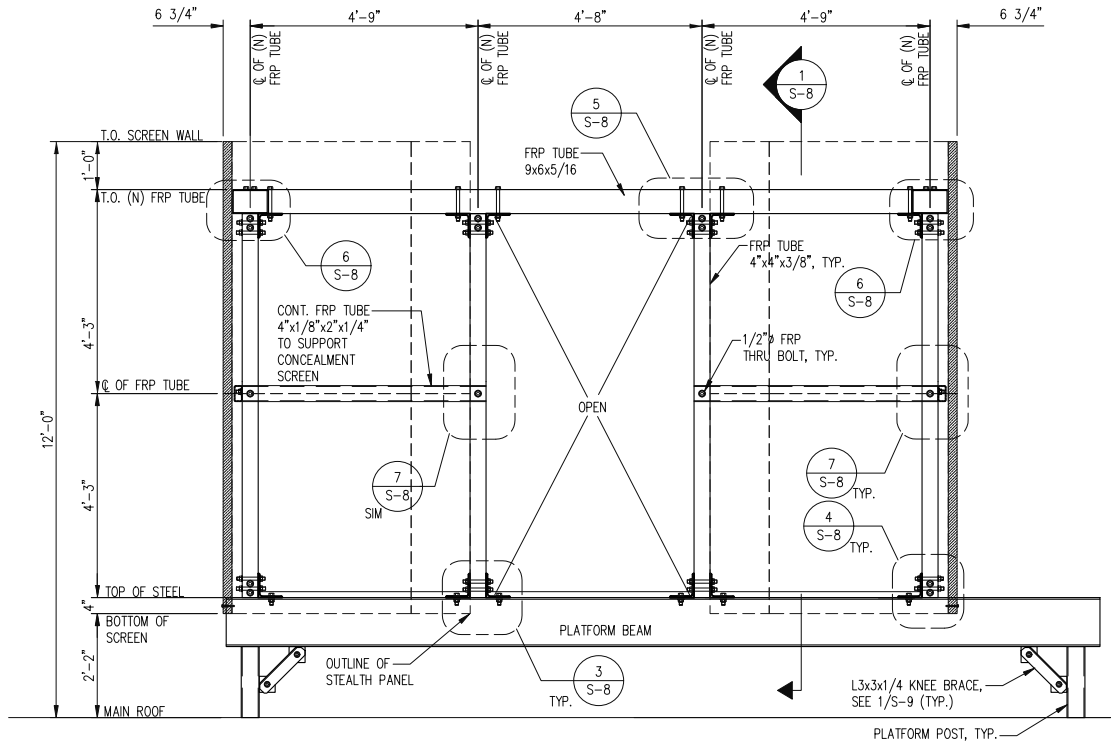

ANTENNA PLATFORM ELEVATION - 2 (SECTOR B)

SCALE: 1/2" =1'-0"

(1 / S-7)

NOTE:
STAIRS NOT SHOWN FOR CLARITY.

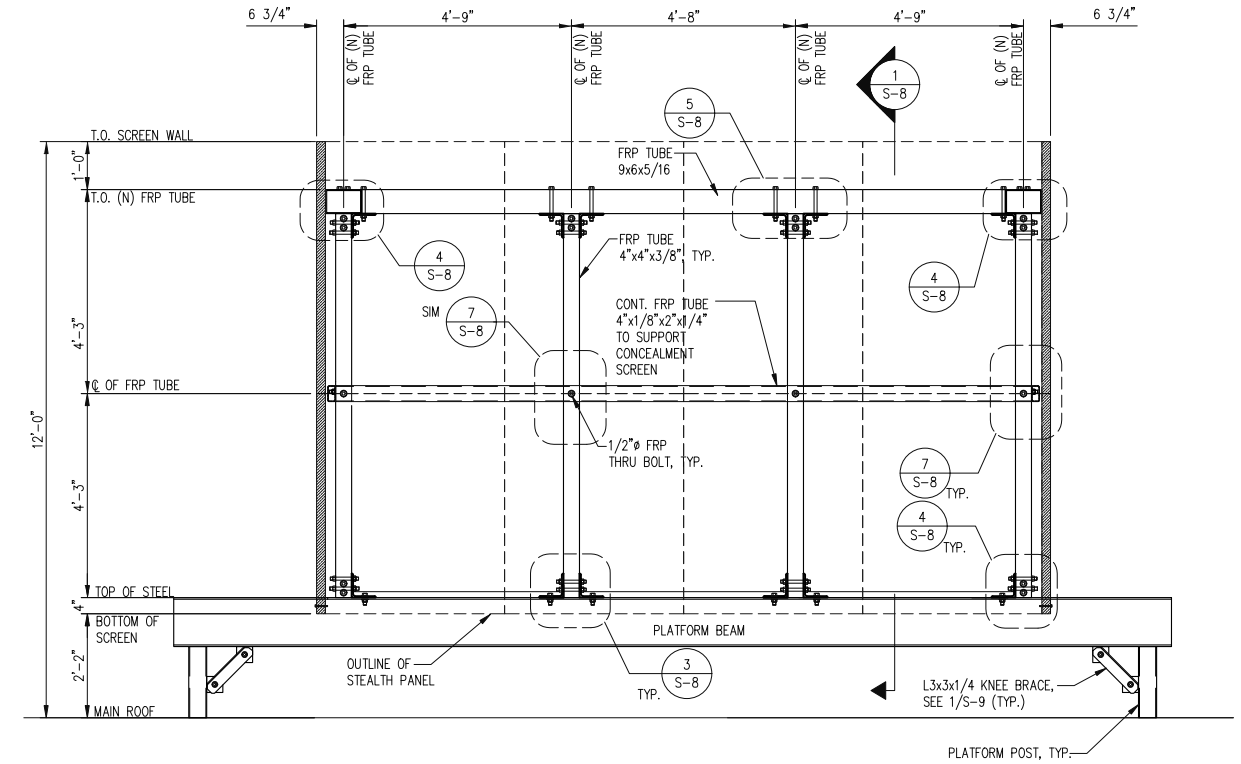

ANTENNA PLATFORM ELEVATION - 2 (SECTOR B)

SCALE: 1/2" =1'-0"

(2 / S-7)

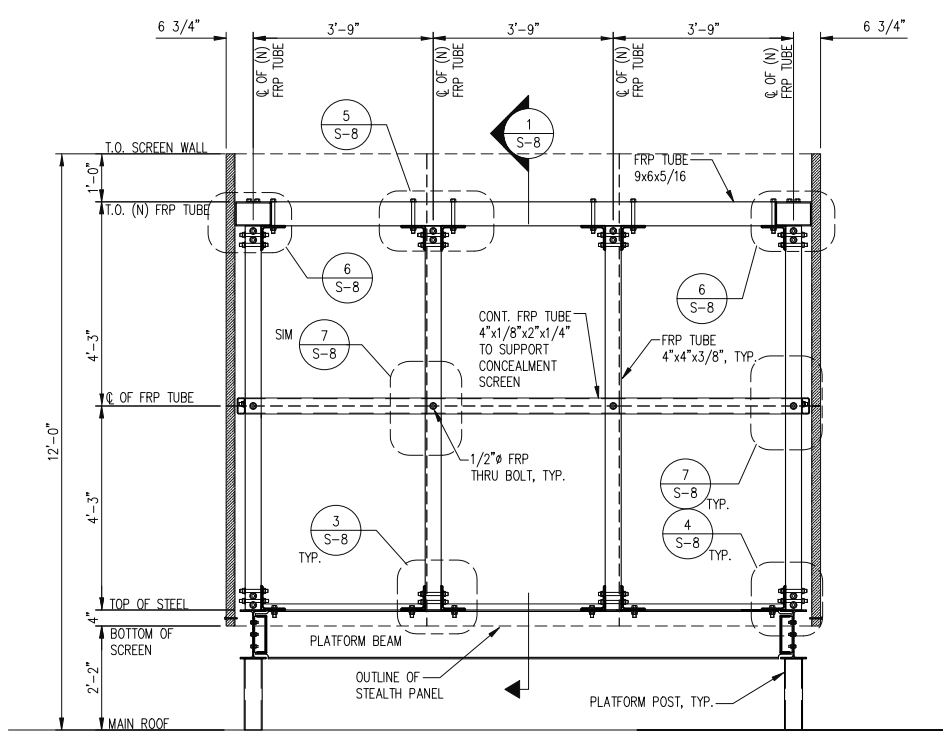

ANTENNA PLATFORM ELEVATION - 2 (SECTOR B)

SCALE: 1/2" =1'-0"

(3 / S-7)

DCRA

SEAL:

DISTRICT OF COLUMBIA
CAMILLE F. SHARBAUGH
10657
REGISTERED PROFESSIONAL ENGINEER

I AM RESPONSIBLE FOR DETERMINING THAT THE ENGINEERING DESIGNS INCLUDED IN THIS APPLICATION ARE IN COMPLIANCE WITH ALL RELEVANT LAWS AND REGULATIONS OF THE DISTRICT OF COLUMBIA. I HAVE PERSONALLY PREPARED, OR DIRECTLY SUPERVISED THE PREPARATION OF, THE ENGINEERING DESIGNS INCLUDED IN THIS APPLICATION

entrex communication services, inc.
6600 Rockledge Drive, Suite 550
Bethesda, MD 20817
PHONE: (202) 408-0960
FAX: (202) 408-0961

at&t
7150 STANDARD DRIVE
HANOVER, MD 21076

smartlink
1362 MELLON RD, STE 140
HANOVER, MD 21076
PHONE: (410) 582-8043
FAX: (410) 221-2962

PROJECT NO:	1152.400
DESIGNER:	TMF
ENGINEER:	C.S.

THESE DRAWINGS ARE FORMATTED TO BE FULL-SIZE AT 22"X34"
0 1/2 1
GRAPHIC SCALE IN INCHES

FA NUMBER: 15140160
SITE ID: 2874
RASIKA
616 E STREET NW
WASHINGTON, D.C. 20004

SUBMITTALS

DATE	DESCRIPTION	REVISION
04-22-2020	ADDITIONAL REDLINES	1
11-09-2020	REVISE POWER SOURCE	2
11-11-2020	COMMENTS	3
04-19-2021	EXPAND ANTENNA EMCLOSURE / ANTENNA CLEARANCES	4
08-23-2021	ADD ANTENNA ENCLOSURE STAIRS & UPDATE DC9'S	5

TITLE:

ANTENNA PLATFORM ELEVATIONS (SECTOR B)

SHEET NUMBER:

S-7

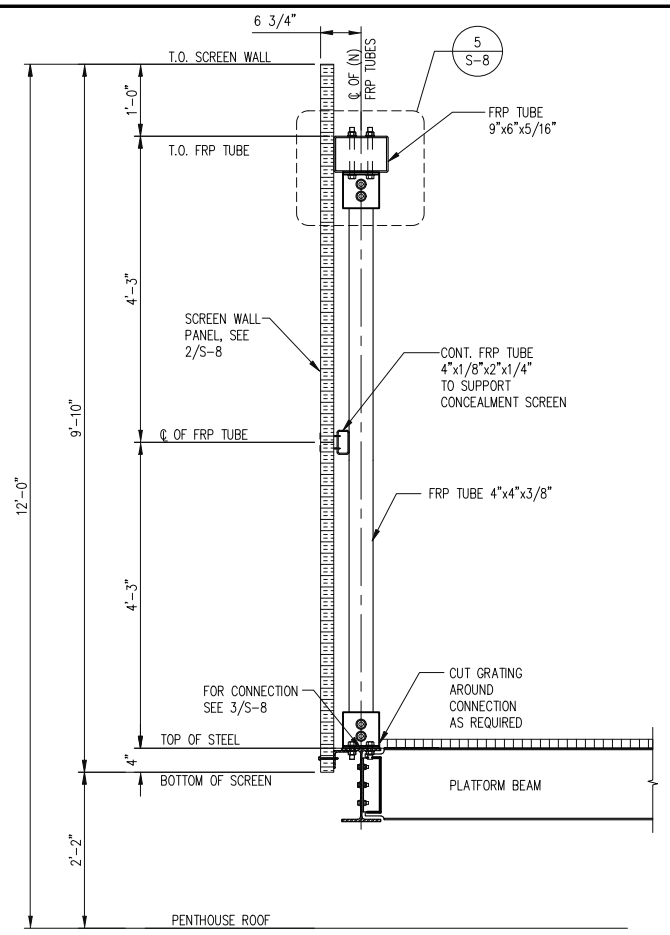

SCREEN WALL SECTION

SCALE: 3/4"=1'-0"

1 / S-8

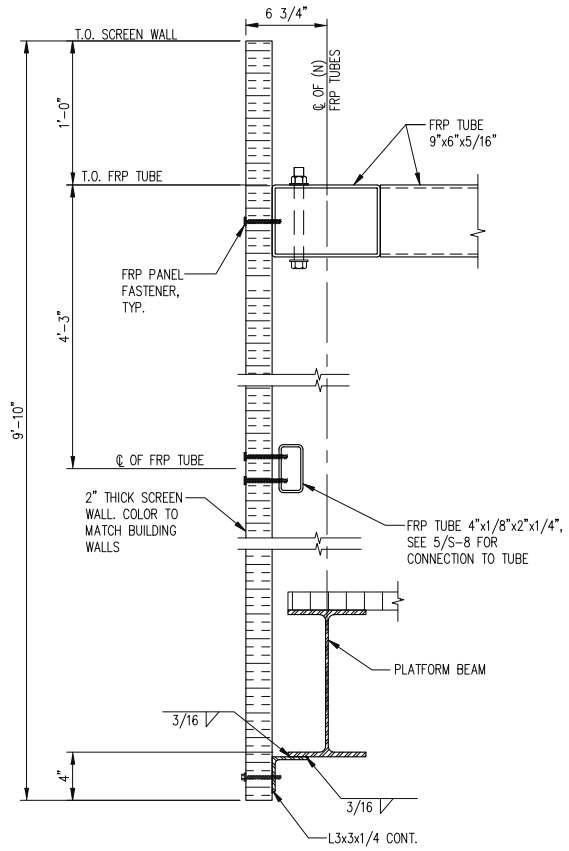

SCREEN PANEL DETAIL

SCALE: 1-1/2"=1'-0"

2 / S-8

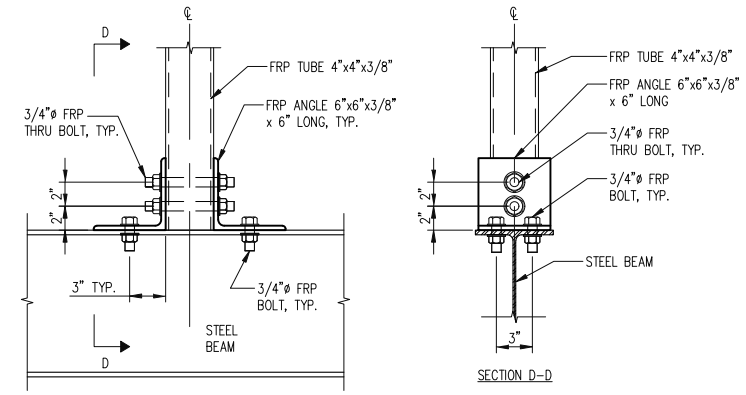

CONNECTION DETAIL

SCALE: 1-1/2"=1'-0"

3 / S-8

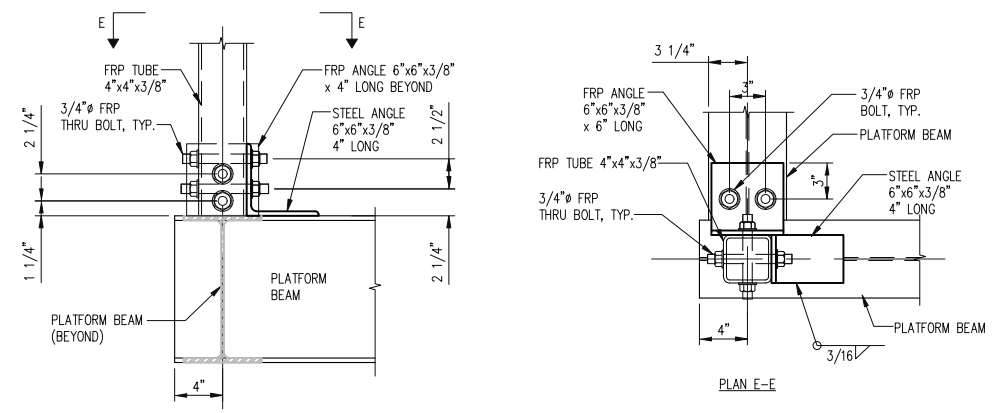

CONNECTION DETAIL

SCALE: 1-1/2"=1'-0"

4 / S-8

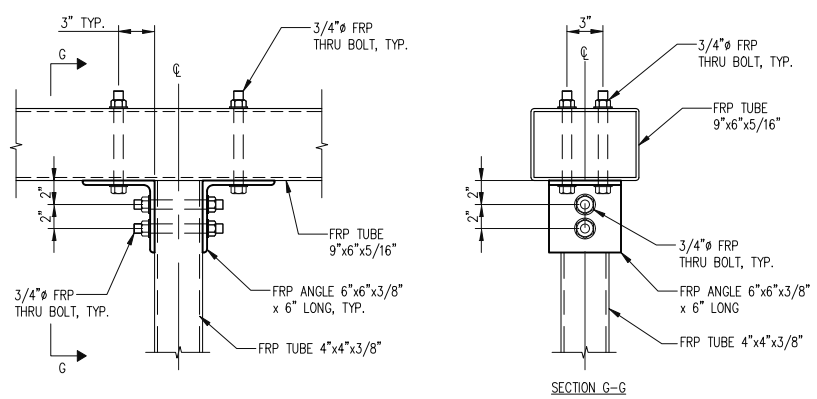

CONNECTION DETAIL

SCALE: 1-1/2"=1'-0"

5 / S-8

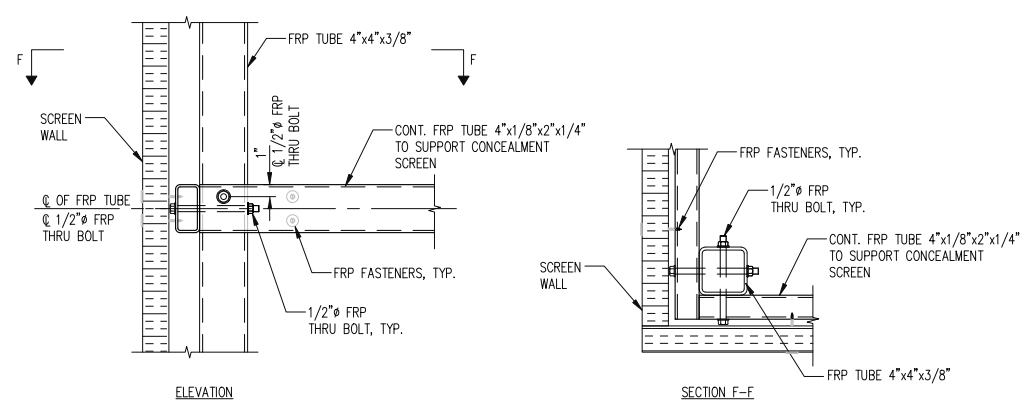

CONNECTION DETAIL

SCALE: 1-1/2"=1'-0"

7 / S-8

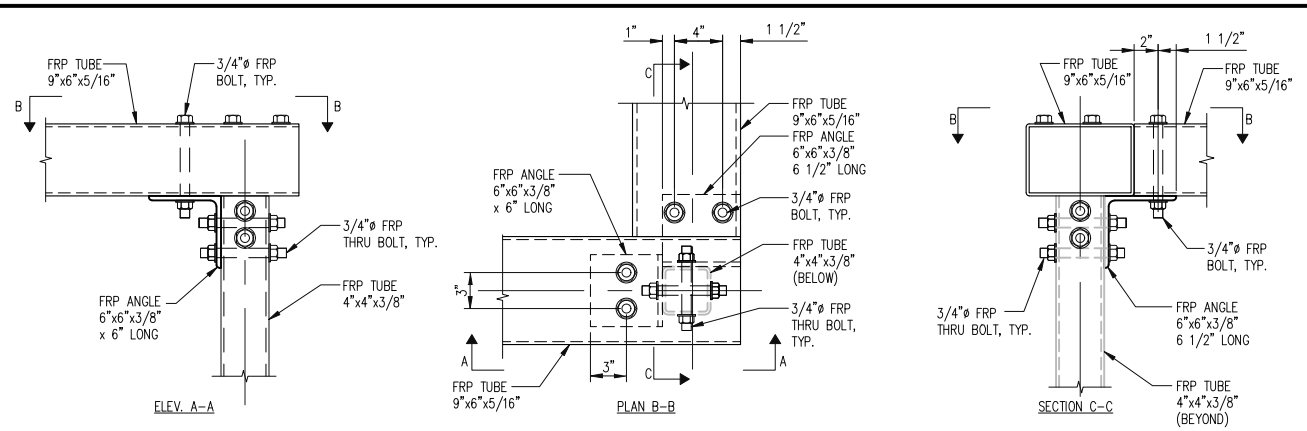

CONNECTION DETAIL

SCALE: 1-1/2"=1'-0"

6 / S-8

DCRA

SEAL:

DISTRICT OF COLUMBIA
CAMILLE F. SHABSHAB
10657
REGISTERED PROFESSIONAL ENGINEER

I AM RESPONSIBLE FOR DETERMINING THAT THE ENGINEERING DESIGNS INCLUDED IN THIS APPLICATION ARE IN COMPLIANCE WITH ALL RELEVANT LAWS AND REGULATIONS OF THE DISTRICT OF COLUMBIA. I HAVE PERSONALLY PREPARED, OR DIRECTLY SUPERVISED THE PREPARATION OF, THE ENGINEERING DESIGNS INCLUDED IN THIS APPLICATION

entrex
communication services, inc.
6600 Rockledge Drive, Suite 550
Bethesda, MD 20817
PHONE: (202) 408-0960
FAX: (202) 408-0961

at&t
7150 STANDARD DRIVE
HANOVER, MD 21076

smartlink
1362 MELLON RD, STE 140
HANOVER, MD 21076
PHONE: (410) 582-8043
FAX: (410) 221-2962

PROJECT NO:	1152.400
DESIGNER:	TMF
ENGINEER:	C.S.

THESE DRAWINGS ARE FORMATTED TO BE FULL-SIZE AT 22"X34"

0 1/2 1

GRAPHIC SCALE IN INCHES

FA NUMBER: 15140160
SITE ID: 2874
RASIKA
616 E STREET NW
WASHINGTON, D.C. 20004

SUBMITTALS

DATE	DESCRIPTION	REVISION
04-22-2020	ADDITIONAL REDLINES	1
11-09-2020	REVISE POWER SOURCE	2
11-11-2020	COMMENTS	3
04-19-2021	EXPAND ANTENNA EMCLOSURE / ANTENNA CLEARANCES	4
08-23-2021	ADD ANTENNA ENCLOSURE STAIRS & UPDATE DC9'S	5

TITLE:

SCREEN WALL DETAILS

SHEET NUMBER:

S-8

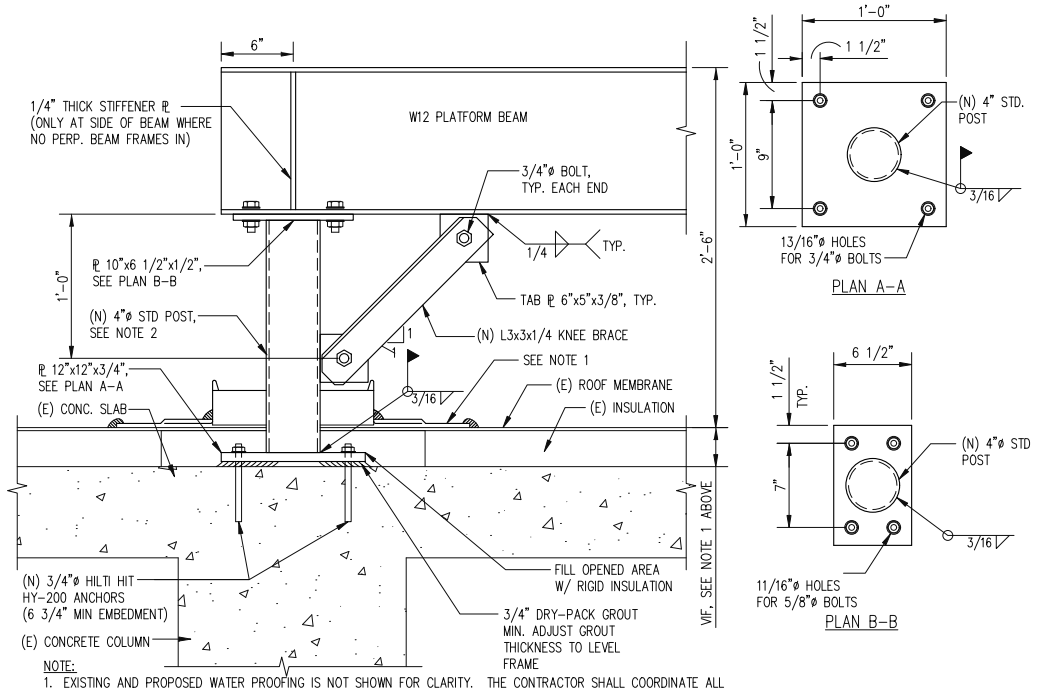

NOTE:

1. EXISTING AND PROPOSED WATER PROOFING IS NOT SHOWN FOR CLARITY. THE CONTRACTOR SHALL COORDINATE ALL WORK WITH THE BUILDING OWNER'S ROOF CONTRACTOR WHO WILL COMPLETE ALL WORK ASSOCIATED WITH THE ROOF. THE CONTRACTOR SHALL OBTAIN WRITTEN APPROVAL FROM THE BUILDING OWNER'S ROOF CONTRACTOR BEFORE INSTALLATION OF ANY ROOF.
2. VERIFY DEPTH OF INSULATION AT POST LOCATION, AND FIELD CUT LENGTH OF POST AS NEEDED. POST SHALL BE FIELD WELDED TO BASE PLATE AFTER REQUIRED PIPE LENGTH HAS BEEN DETERMINED. THE FIELD WELDING CAN BE DONE AT GROUND LEVEL TO AVOID WELDING ON ROOF.

TYPICAL POST TO CONCRETE COLUMN CONNECTION

SCALE: 1 1/2"=1'-0"

1 / S-9

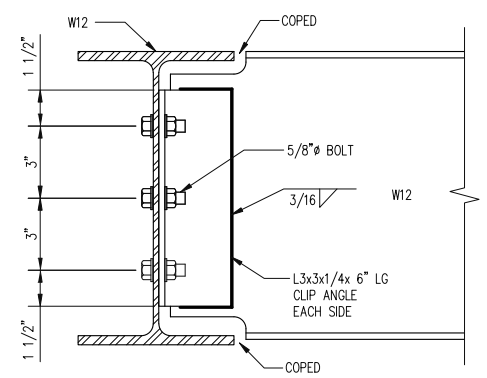

TYPICAL W12 TO W12 CONNECTION DETAIL

SCALE: 3"=1'-0"

2 / S-9

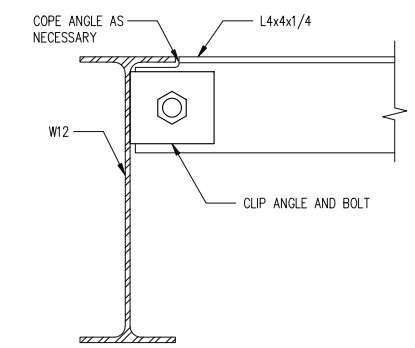

TYPICAL ANGLE TO BEAM CONNECTION DETAIL

SCALE: 3"=1'-0"

3 / S-9

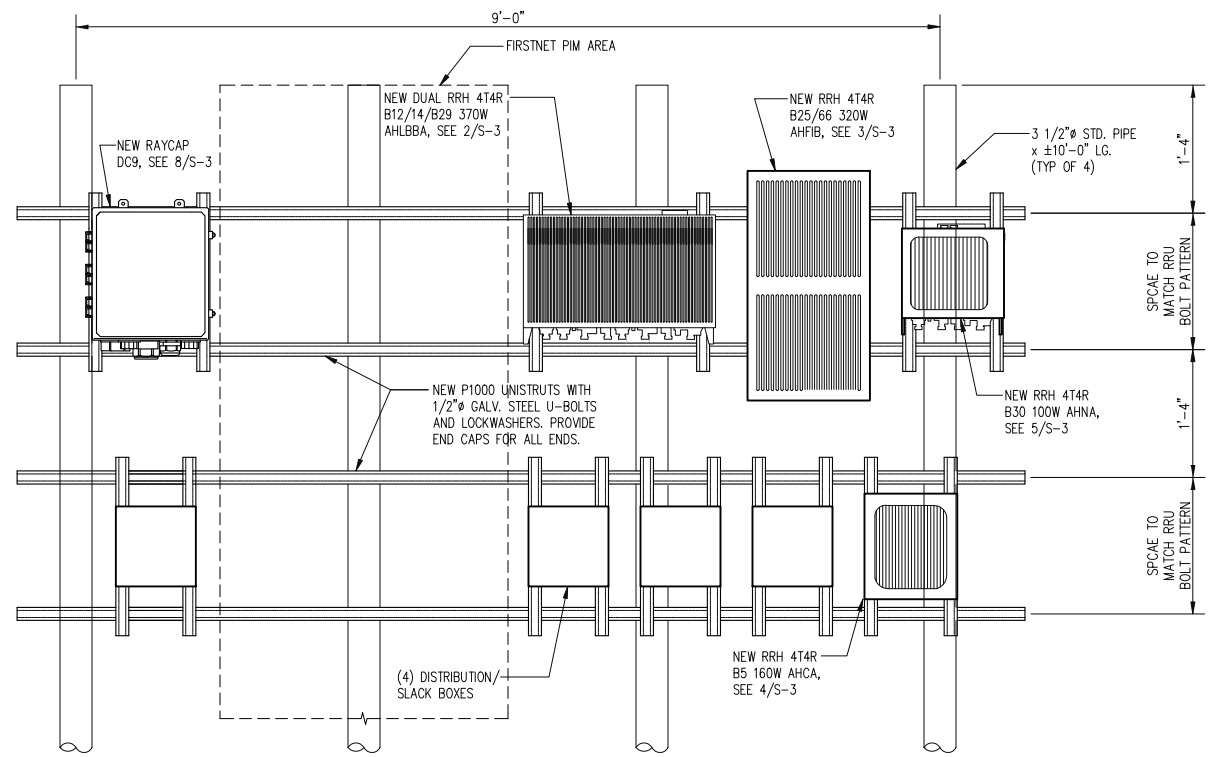

NOTE:

1. PROVIDE GALVANIZED P1000 UNISTRUTS AS NEEDED TO MOUNT ALL COMPONENTS.
2. ATTACH UNISTRUT TO BUILDING WALL WITH 3/8" HILTI HY-200 4" EMBEDMENT ANCHORS. OR TO EXISTING SCREEN WALL METAL SIDING WITH 3/8" HILTI HY-20 2 1/4" EMBEDMENT ANCHORS. SEAL ANCHOR PENETRATIONS WITH SILICONE. PROVIDE CAPS FOR ALL ENDS
3. ALL CABLES BETWEEN DISTRIBUTION BOXES AND RRHs SHALL BE IN FLEX CONDUITS.

TYPICAL EQUIPMENT MOUNTING DETAIL

SCALE: 1"=1'-0"

6 / S-9

DCRA

SEAL:

DISTRICT OF COLUMBIA
CAMILLE F. SHABAHAS
10657
PROFESSIONAL ENGINEER
REGISTERED

I AM RESPONSIBLE FOR DETERMINING THAT THE ENGINEERING DESIGNS INCLUDED IN THIS APPLICATION ARE IN COMPLIANCE WITH ALL RELEVANT LAWS AND REGULATIONS OF THE DISTRICT OF COLUMBIA. I HAVE PERSONALLY PREPARED, OR DIRECTLY SUPERVISED THE PREPARATION OF, THE ENGINEERING DESIGNS INCLUDED IN THIS APPLICATION

entrex communication services, inc.
6600 Rockledge Drive, Suite 550
Bethesda, MD 20817
PHONE: (202) 408-0960
FAX: (202) 408-0961

at&t
7150 STANDARD DRIVE
HANOVER, MD 21076

PROJECT NO:	1152.400
DESIGNER:	TMF
ENGINEER:	C.S.

THESE DRAWINGS ARE FORMATTED TO BE FULL-SIZE AT 22"X34"

0 1/2 1

GRAPHIC SCALE IN INCHES

smartlink
1362 MELLON RD, STE 140
HANOVER, MD 21076
PHONE: (410) 582-8043
FAX: (410) 221-2962

FA NUMBER: 15140160
SITE ID: 2874
RASIKA
616 E STREET NW
WASHINGTON, D.C. 20004

SUBMITTALS

DATE	DESCRIPTION	REVISION
04-22-2020	ADDITIONAL REDLINES	1
11-09-2020	REVISE POWER SOURCE	2
11-11-2020	COMMENTS	3
04-19-2021	EXPAND ANTENNA EMCLOSURE / ANTENNA CLEARANCES	4
08-23-2021	ADD ANTENNA ENCLOSURE STAIRS & UPDATE DC9'S	5

TITLE:

ANTENNA PLATFORM STRUCTURAL DETAILS

SHEET NUMBER:

S-9

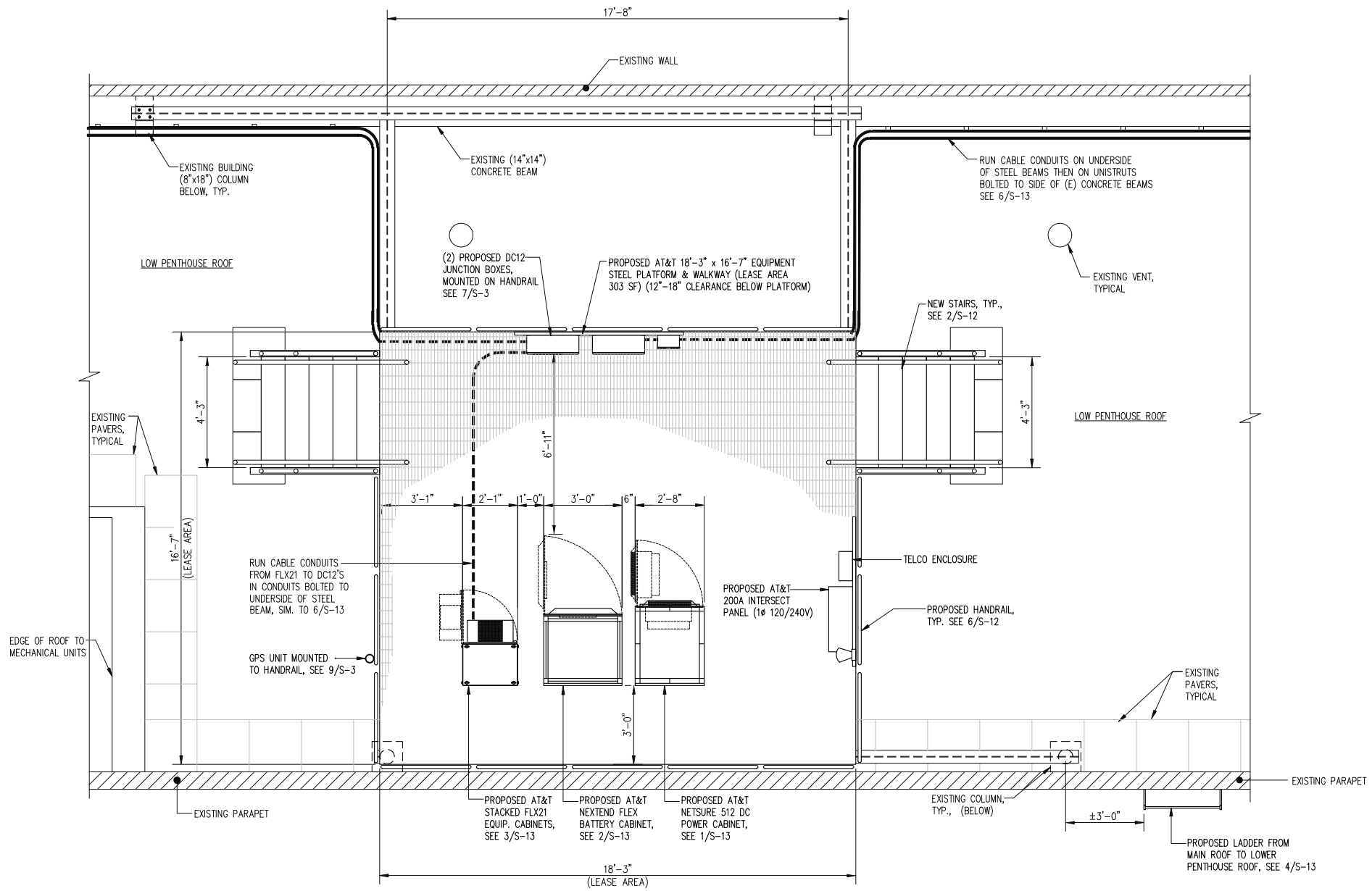

EQUIPMENT PLATFORM PLAN

SCALE: 3/8"=1'-0"

1 / S-10

TRUE NORTH

DCRA

SEAL:

DISTRICT OF COLUMBIA
CAMILLE F. SHABSHAB
10657
PROFESSIONAL ENGINEER
REGISTERED

I AM RESPONSIBLE FOR DETERMINING THAT THE ENGINEERING DESIGNS INCLUDED IN THIS APPLICATION ARE IN COMPLIANCE WITH ALL RELEVANT LAWS AND REGULATIONS OF THE DISTRICT OF COLUMBIA. I HAVE PERSONALLY PREPARED, OR DIRECTLY SUPERVISED THE PREPARATION OF, THE ENGINEERING DESIGNS INCLUDED IN THIS APPLICATION

entrex communication services, inc.
6600 Rockledge Drive, Suite 550
Bethesda, MD 20817
PHONE: (202) 408-0960
FAX: (202) 408-0961

at&t
7150 STANDARD DRIVE
HANOVER, MD 21076

smartlink
1362 MELLON RD, STE 140
HANOVER, MD 21076
PHONE: (410) 582-8043
FAX: (410) 221-2962

PROJECT NO:	1152.400
DESIGNER:	TMF
ENGINEER:	C.S.

THESE DRAWINGS ARE FORMATTED TO BE FULL-SIZE AT 22"X34"

0 1/2 1

GRAPHIC SCALE IN INCHES

FA NUMBER: 15140160
SITE ID: 2874
RASIKA
616 E STREET NW
WASHINGTON, D.C. 20004

SUBMITTALS

DATE	DESCRIPTION	REVISION
04-22-2020	ADDITIONAL REDLINES	1
11-09-2020	REVISE POWER SOURCE	2
11-11-2020	COMMENTS	3
04-19-2021	EXPAND ANTENNA EMCLOSURE / ANTENNA CLEARANCES	4
08-23-2021	ADD ANTENNA ENCLOSURE STAIRS & UPDATE DC9'S	5

TITLE:

EQUIPMENT PLATFORM PLAN

SHEET NUMBER:

S-10

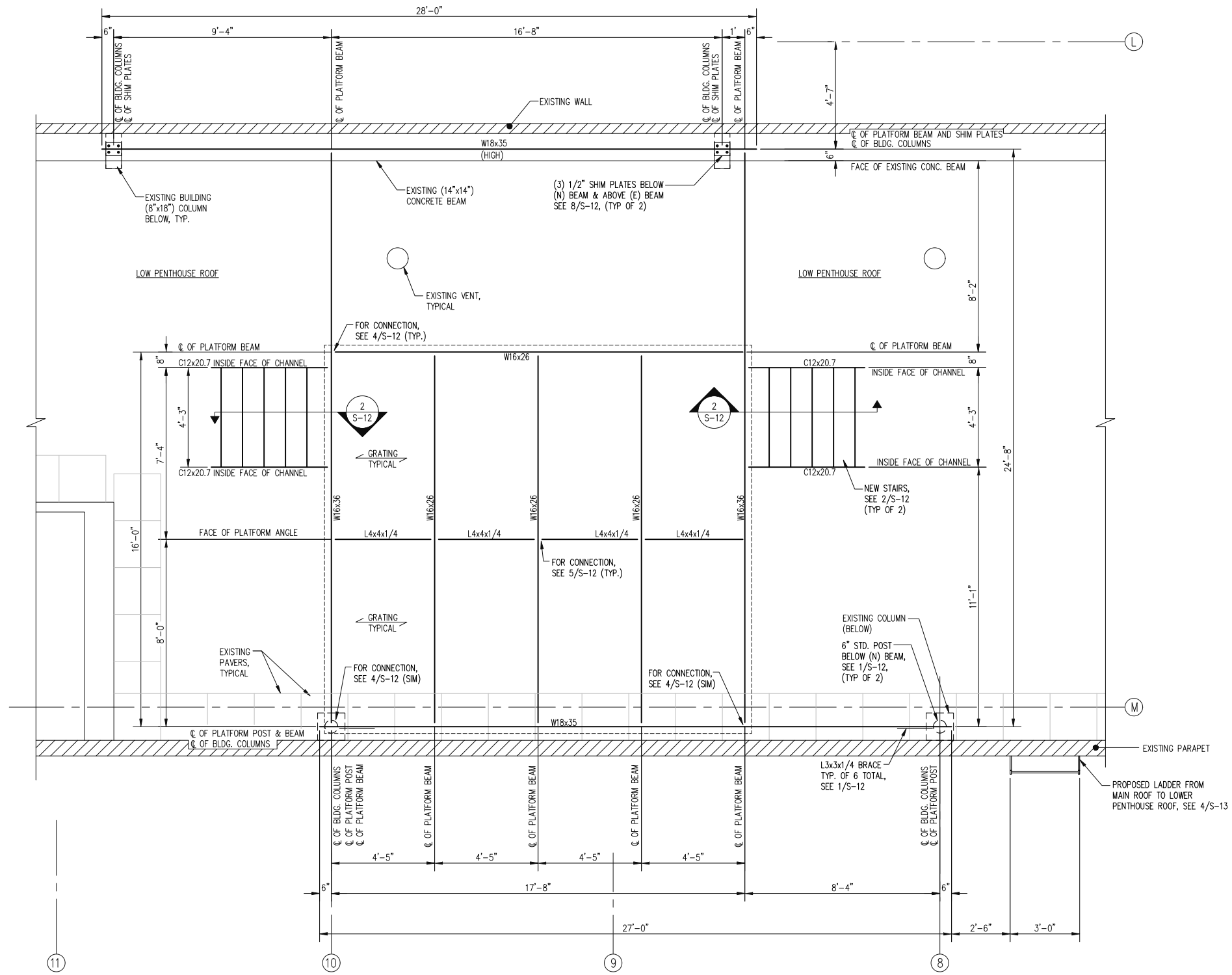

EQUIPMENT PLATFORM FRAMING PLAN

SCALE: 3/8"=1'-0"

1 S-11

TRUE NORTH

NOTES:

1. CONTRACTOR SHALL FIELD VERIFY COLUMN LOCATIONS PRIOR TO FABRICATION. (FIELD DETERMINED COLUMN LOCATIONS SHALL BE REPORTED TO THE ENGINEER PRIOR TO FABRICATION (ENTREX COMMUNICATION SERVICES 202-408-0960))
2. THE CONTRACTOR SHALL PREPARE A SET OF STEEL SHOP DRAWINGS FOR REVIEW AND APPROVAL BY THE ENGINEER PRIOR TO ORDERING/FABRICATING STEEL.
3. THE PLATFORM DESIGN LOAD IS 60 PSF. THE STAIR DESIGN LIVE LOAD IS 100 PSF.
4. GRATING SHALL BE 1 1/2" X 3/16" BEARING BARS 1 3/16" O.C. AND 1/8" X 3/4" CROSS BARS 4" O.C. SECURE GRATING TO STEEL FRAMING WITH GRATING CLAMPS 18" O.C. GRATING SHALL BE HOT DIP GALVANIZED AND ALL EDGES AND OPENINGS SHALL BE BANDED.
5. THE TOP OF PLATFORM STEEL FRAMING IS 3'-6" ABOVE THE EXISTING ROOF SURFACE. THE CLEARANCE BETWEEN BOTTOM OF STEEL AND ROOF IS 12" - 18".
6. ALL STEEL SHALL BE HOT-DIPPED GALVANIZED. CLEAN WELDED AREAS WITH POWER TOOL. PAINT WELDED AREAS WITH TWO LAYERS OF GALVANIC PAINT.
7. REFER TO SHEET N-1 FOR STRUCTURAL NOTES.
8. SEE SHEET S-12 FOR TYPICAL BEAM CONNECTION DETAILS.

DCRA

SEAL:

DISTRICT OF COLUMBIA
CAMILLE F. SHABSHAB
10657
PROFESSIONAL ENGINEER
REGISTERED

I AM RESPONSIBLE FOR DETERMINING THAT THE ENGINEERING DESIGNS INCLUDED IN THIS APPLICATION ARE IN COMPLIANCE WITH ALL RELEVANT LAWS AND REGULATIONS OF THE DISTRICT OF COLUMBIA. I HAVE PERSONALLY PREPARED, OR DIRECTLY SUPERVISED THE PREPARATION OF, THE ENGINEERING DESIGNS INCLUDED IN THIS APPLICATION

entrex communication services, inc.
6600 Rockledge Drive, Suite 550
Bethesda, MD 20817
PHONE: (202) 408-0960
FAX: (202) 408-0961

at&t
7150 STANDARD DRIVE
HANOVER, MD 21076

smartlink
1362 MELLON RD, STE 140
HANOVER, MD 21076
PHONE: (410) 582-8043
FAX: (410) 221-2962

PROJECT NO:	1152.400
DESIGNER:	TMF
ENGINEER:	C.S.

THESE DRAWINGS ARE FORMATTED TO BE FULL-SIZE AT 22"X34"

0 1/2 1

GRAPHIC SCALE IN INCHES

FA NUMBER: 15140160
SITE ID: 2874
RASIKA
616 E STREET NW
WASHINGTON, D.C. 20004

SUBMITTALS

DATE	DESCRIPTION	REVISION
04-22-2020	ADDITIONAL REDLINES	1
11-09-2020	REVISE POWER SOURCE	2
11-11-2020	COMMENTS	3
04-19-2021	EXPAND ANTENNA EMCLOSURE / ANTENNA CLEARANCES	4
08-23-2021	ADD ANTENNA ENCLOSURE STAIRS & UPDATE DC9'S	5

TITLE:

EQUIPMENT PLATFORM FRAMING PLAN

SHEET NUMBER:

S-11

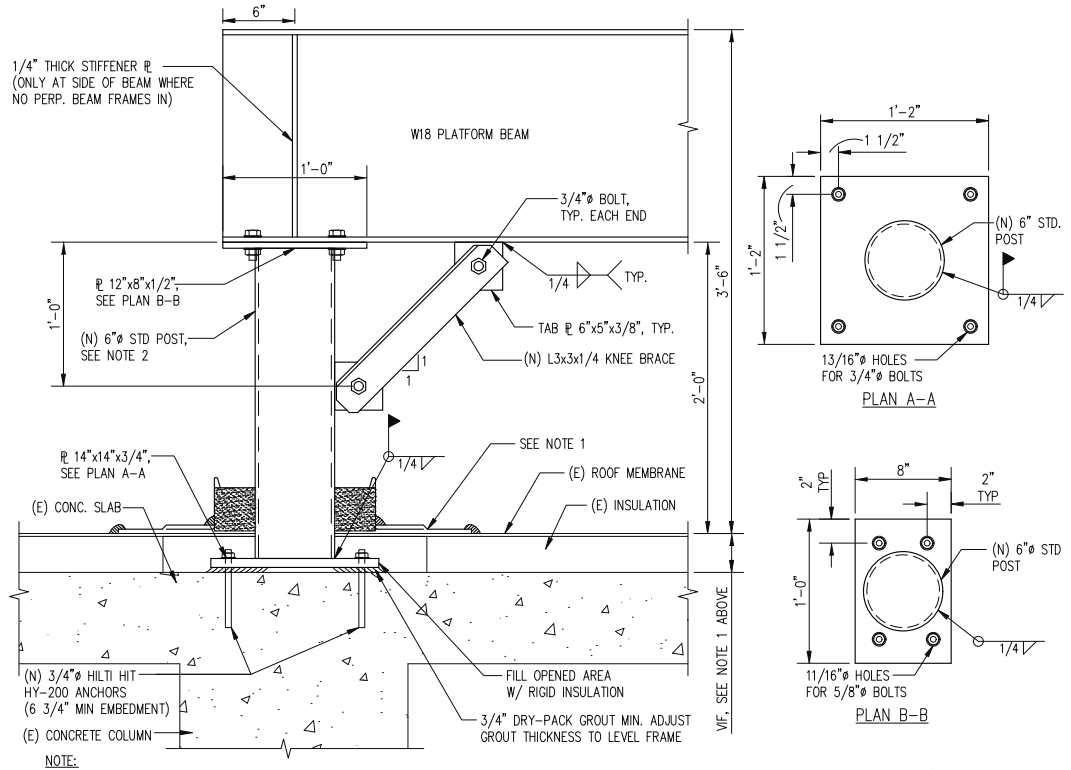

NOTE:

1. EXISTING AND PROPOSED WATER PROOFING IS NOT SHOWN FOR CLARITY. THE CONTRACTOR SHALL COORDINATE ALL WORK WITH THE BUILDING OWNER'S ROOF CONTRACTOR WHO WILL COMPLETE ALL WORK ASSOCIATED WITH THE ROOF. THE CONTRACTOR SHALL OBTAIN WRITTEN APPROVAL FROM THE BUILDING OWNER'S ROOF CONTRACTOR BEFORE INSTALLATION OF ANY ROOF
2. VERIFY DEPTH OF INSULATION AT POST LOCATION, AND FIELD CUT LENGTH OF POST AS NEEDED. POST SHALL BE FIELD WELDED TO BASE PLATE AFTER REQUIRED PIPE LENGTH HAS BEEN DETERMINED. THE FIELD WELDING CAN BE DONE AT GROUND LEVEL TO AVOID WELDING ON ROOF.

TYPICAL POST TO CONCRETE COLUMN CONNECTION

SCALE: 1 1/2"=1'-0" (1 / S-12)

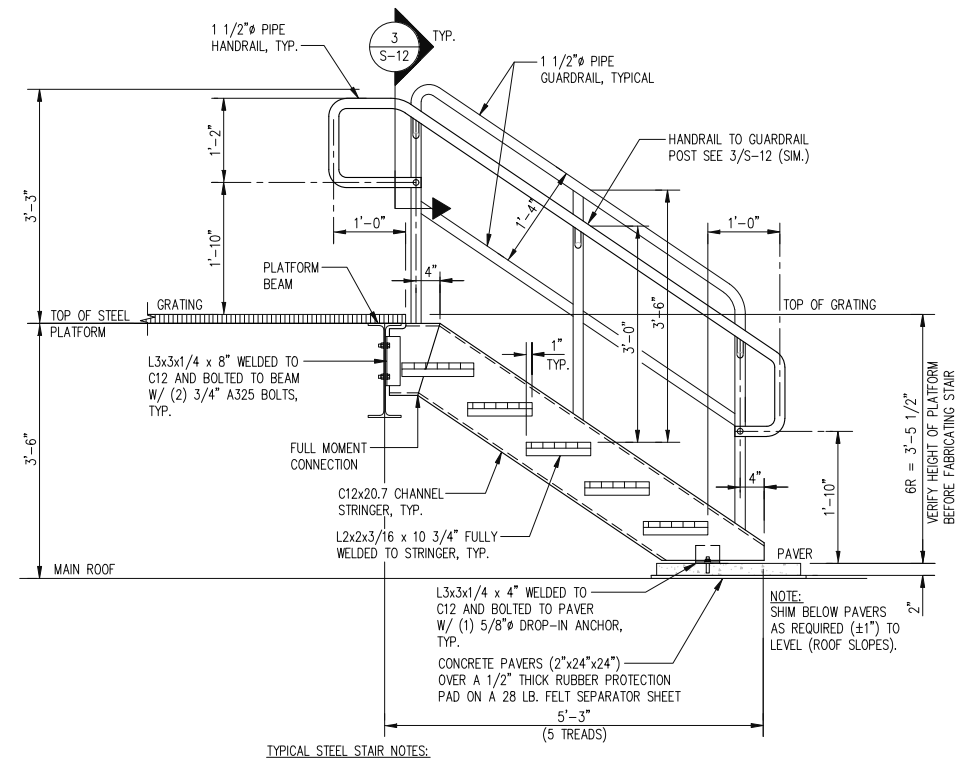

NOTE: SHIM BELOW PAVERS AS REQUIRED (±1") TO LEVEL (ROOF SLOPES).

TYPICAL STEEL STAIR NOTES:

1. ALL RAILS AND POSTS ARE 1 1/2" SCHED. 40 GALV. STEEL PIPE. POSTS TO BE CENTERED ON THE TOP FLANGE OF CHANNEL OR STRINGER, TYP.
2. ALL RAIL TO POST INTERSECTIONS AND POST TO STRINGER TO BE FULLY WELDED 3/16" FILLET WELD ALL AROUND, GROUND SMOOTH. RAIL ENDS WHERE EXPOSED, TO BE CAPPED AND FULLY WELDED.
3. CLEAN WELDED AREAS WITH POWER TOOL AND PAINT WITH 2 LAYERS OF GALVANIC PAINT, TYP.

STEEL STAIR DETAIL

SCALE: 3/4"=1'-0" (2 / S-12)

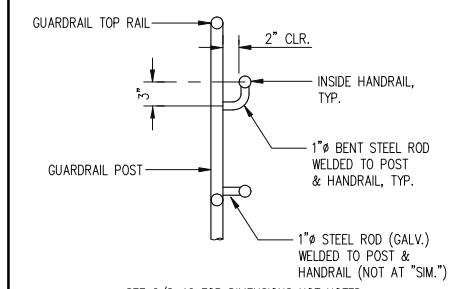

SEE 2/S-12 FOR DIMENSIONS NOT NOTED.

STAIR HANDRAIL DETAIL

SCALE: 1"=1'-0" (3 / S-12)

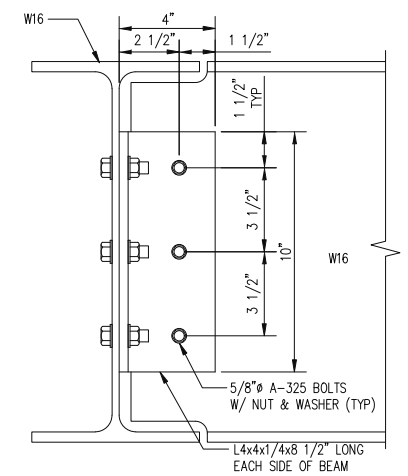

SECTION

SCALE: 3"=1'-0" (4 / S-12)

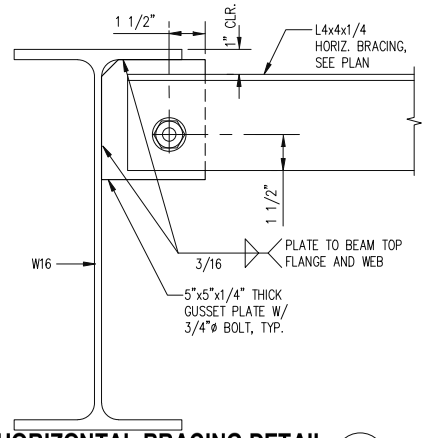

HORIZONTAL BRACING DETAIL

SCALE: 3"=1'-0" (5 / S-12)

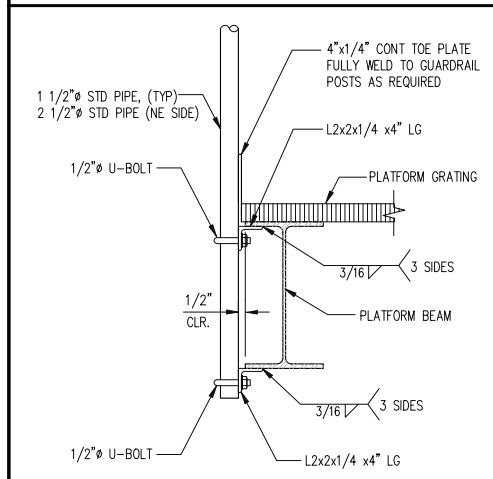

HANDRAIL CONNECTION DETAIL

SCALE: 1-1/2"=1'-0" (7 / S-12)

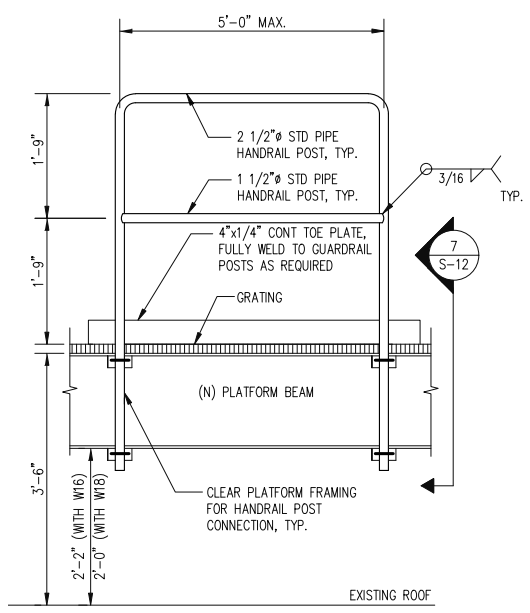

GUARDRAIL DETAIL

SCALE: 3/4"=1'-0" (6 / S-12)

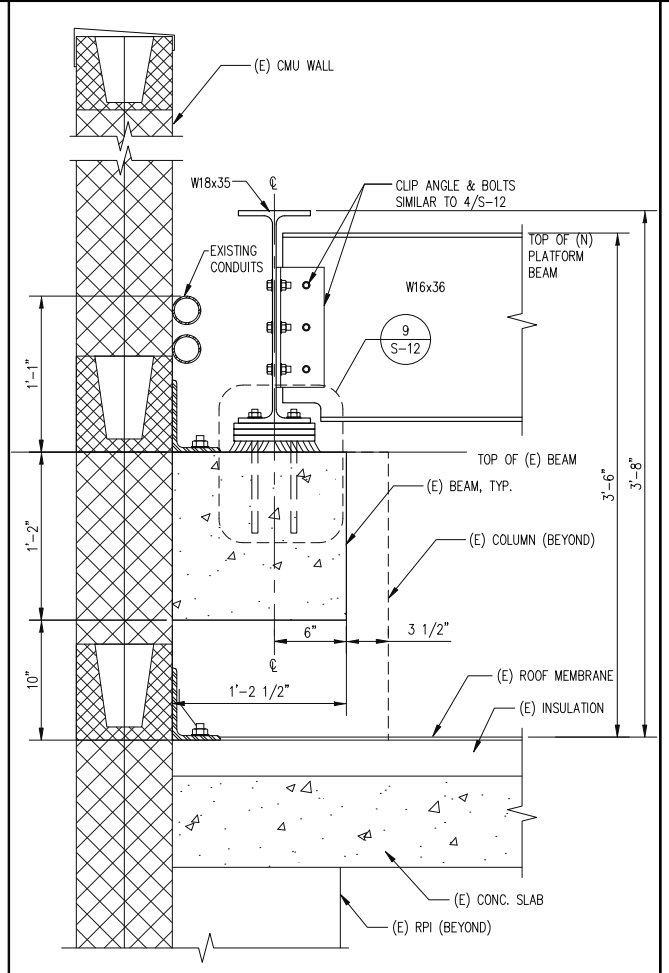

POST CONENCTION TO (E) BEAM

SCALE: 1 1/2"=1'-0" (8 / S-12)

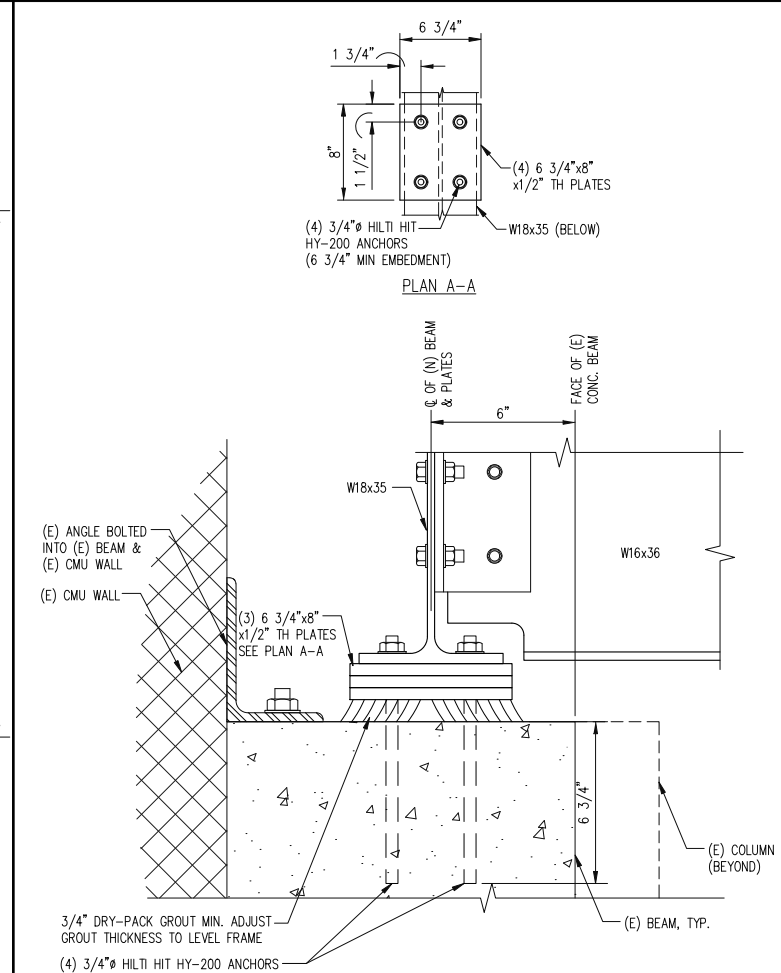

CONNECTION DETAIL

SCALE: 3"=1'-0" (9 / S-12)

DCRA

SEAL:

DISTRICT OF COLUMBIA CAMILLE F. SHARSHAR 10657 REGISTERED PROFESSIONAL ENGINEER

I AM RESPONSIBLE FOR DETERMINING THAT THE ENGINEERING DESIGNS INCLUDED IN THIS APPLICATION ARE IN COMPLIANCE WITH ALL RELEVANT LAWS AND REGULATIONS OF THE DISTRICT OF COLUMBIA. I HAVE PERSONALLY PREPARED, OR DIRECTLY SUPERVISED THE PREPARATION OF, THE ENGINEERING DESIGNS INCLUDED IN THIS APPLICATION

entrex communication services, inc.
6600 Rockledge Drive, Suite 550
Bethesda, MD 20817
PHONE: (202) 408-0960
FAX: (202) 408-0961

at&t
7150 STANDARD DRIVE
HANOVER, MD 21076

smartlink
1362 MELLON RD, STE 140
HANOVER, MD 21076
PHONE: (410) 582-8043
FAX: (410) 221-2962

PROJECT NO:	1152.400
DESIGNER:	TMF
ENGINEER:	C.S.

THESE DRAWINGS ARE FORMATTED TO BE FULL-SIZE AT 22"X34"

0 1/2 1

GRAPHIC SCALE IN INCHES

FA NUMBER: 15140160
SITE ID: 2874
RASIKA
616 E STREET NW
WASHINGTON, D.C. 20004

SUBMITTALS

DATE	DESCRIPTION	REVISION
04-22-2020	ADDITIONAL REDLINES	1
11-09-2020	REVISE POWER SOURCE	2
11-11-2020	COMMENTS	3
04-19-2021	EXPAND ANTENNA EMCLOSURE / ANTENNA CLEARANCES	4
08-23-2021	ADD ANTENNA ENCLOSURE STAIRS & UPDATE DC9'S	5

TITLE:

EQUIPMENT PLATFORM STRUCTURAL DETAILS

SHEET NUMBER:

S-12

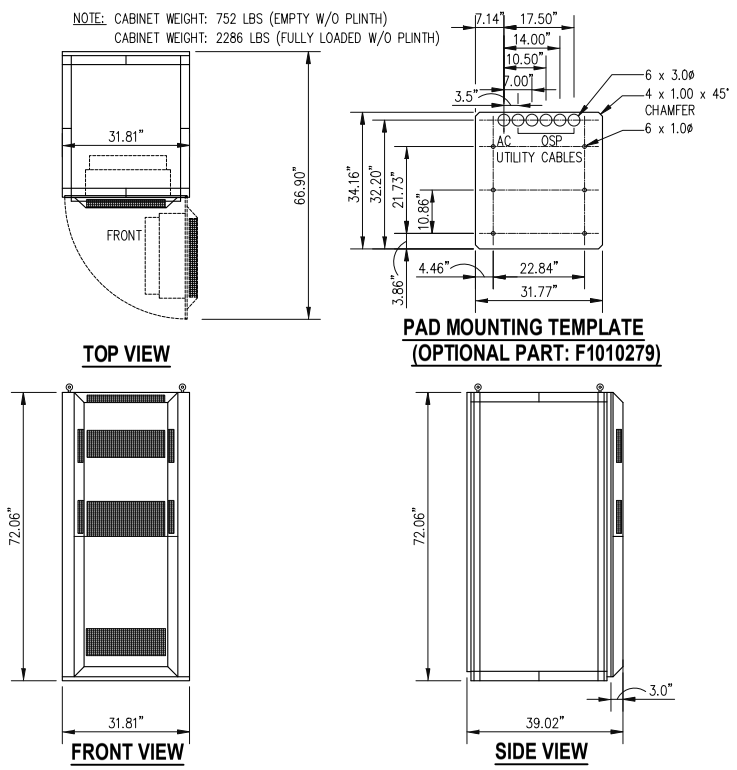

OUTDOOR NETSURE 512 DC POWER CABINET DETAIL (1 / S-13)

SCALE: 1/2"=1'-0"

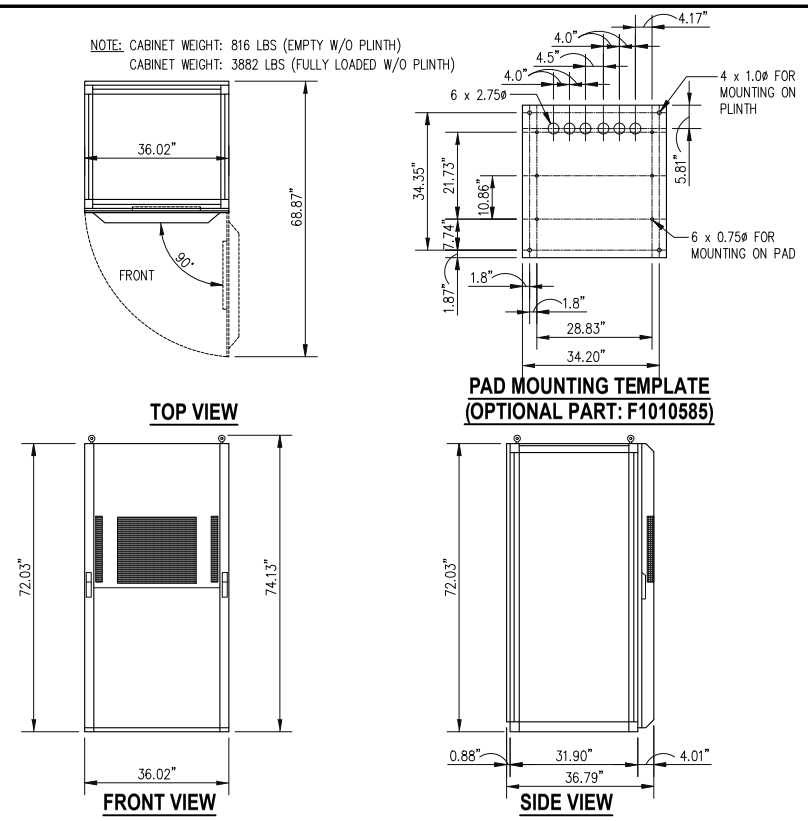

OUTDOOR NETXTEND FLEX BATTERY CABINET DETAIL (2 / S-13)

SCALE: 1/2"=1'-0"

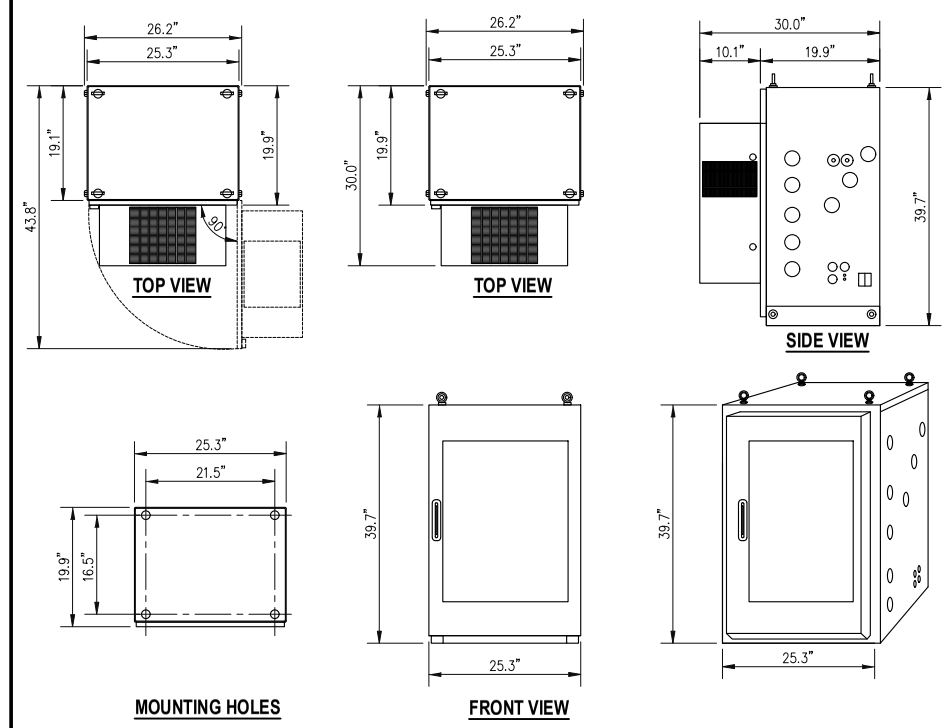

FLX21 CABINET DETAIL (3 / S-13)

SCALE: 3/4"=1'-0"

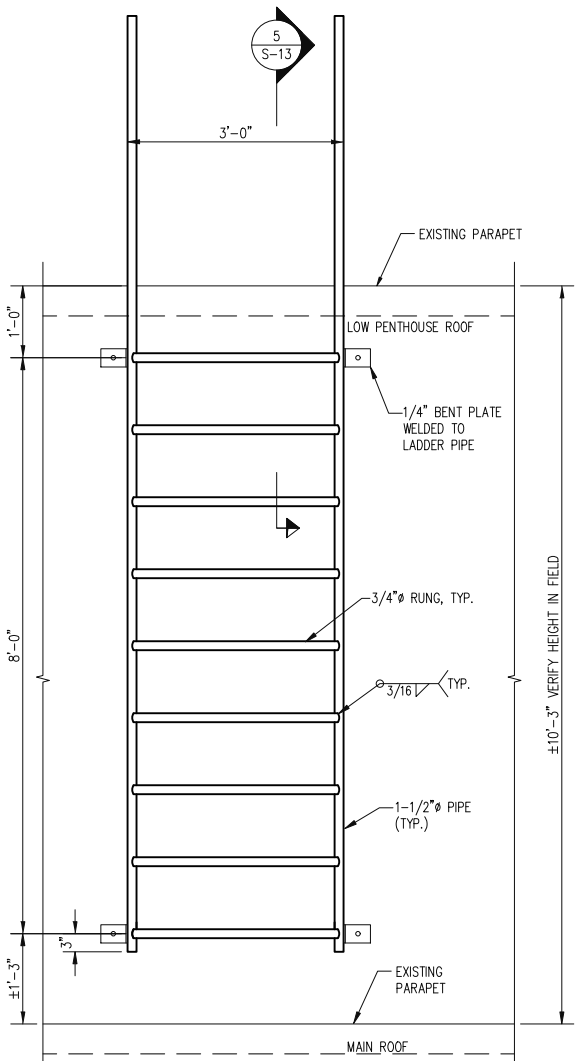

LADDER ELEVATION (4 / S-13)

SCALE: 3/4" = 1'-0"

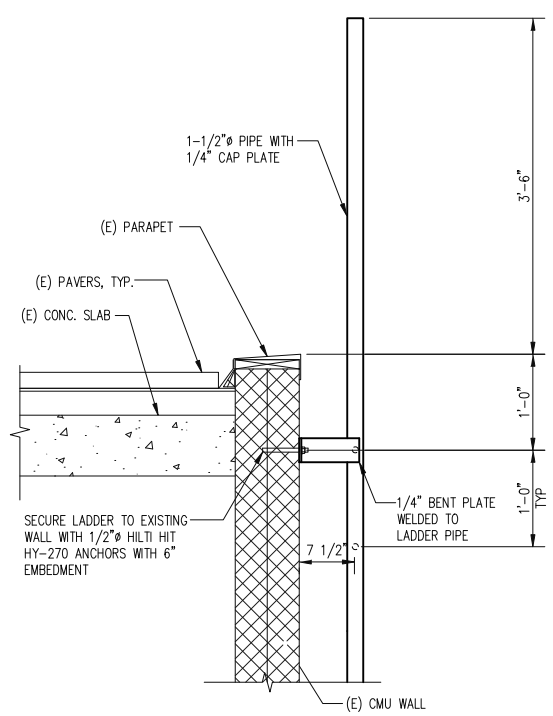

LADDER DETAIL (5 / S-13)

SCALE: 1" = 1'-0"

NOTES:
1. USE STANDARD STAINLESS STEEL HARDWARE FOR WALL CONNECTIONS.
2. SPACE SUPPORTS @ 4'-0" ON CENTER MAXIMUM.
3. DETAIL APPLIES TO BOTH VERTICAL AND HORIZONTAL CONDUIT RUNS.
4. COVER NOT SHOWN IN ELEVATION & ISOMETRIC VIEWS FOR CLARITY

UNISTRUT MOUNTING CHART	
WALL CONSTRUCTION TYPE	USE
HOLLOW	3/8"ø TOGGLE BOLT
HOLLOW, AT STUD	3/8"ø LAG SCREW
CONCRETE BLOCK (HOLLOW)	3/8"ø HILTI HY-70 (MIN. EMBEDMENT 2-1/2")
CONCRETE (SOLID)	3/8"ø HILTI HY-200 (MIN. EMBEDMENT 2-1/2")

1. CONDUIT OR PIPE
2. BUTTERFLY CLAMP AS REQUIRED
3. EXISTING WALL ASSEMBLY
4. UNISTRUT P1000 'T' SERIES LENGTH BASED ON NUMBER OF CONDUIT TO BE MOUNTED
5. ANCHOR, SEE TABLE ABOVE
6. 20 GA. SHEET METAL COVER PAINTED TO MATCH WALL COLOR & BOLTED TO UNISTRUTS

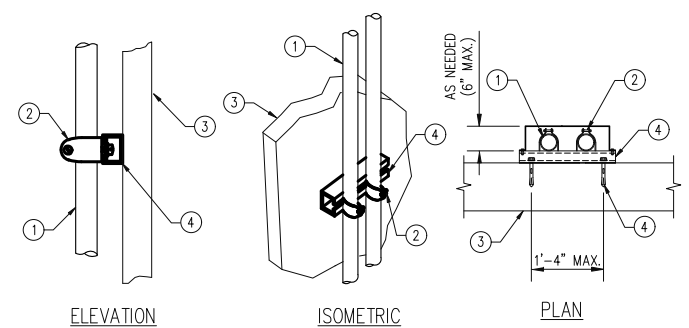

COVERED CONDUIT OR CONDUIT ON WALL DETAIL (6 / S-13)

SCALE: 3/4"=1'-0"

DURABLOCK DB SERIES LENGTH CHART	
PART NUMBER	LENGTH
DB5	4.8"
DB10	9.6"
DB20	20.2"
DB30	30.8"
DB40	41.4"

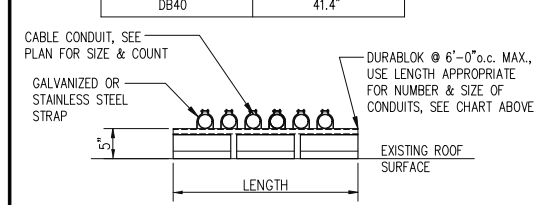

CABLE CONDUIT SUPPORT DETAIL (7 / S-13)

SCALE: 3/4"= 1'-0"

DCRA

SEAL:

DISTRICT OF COLUMBIA
CAMILLE F. SHARSHAR
10657
REGISTERED PROFESSIONAL ENGINEER

I AM RESPONSIBLE FOR DETERMINING THAT THE ENGINEERING DESIGNS INCLUDED IN THIS APPLICATION ARE IN COMPLIANCE WITH ALL RELEVANT LAWS AND REGULATIONS OF THE DISTRICT OF COLUMBIA. I HAVE PERSONALLY PREPARED, OR DIRECTLY SUPERVISED THE PREPARATION OF, THE ENGINEERING DESIGNS INCLUDED IN THIS APPLICATION

entrex communication services, inc.
6600 Rockledge Drive, Suite 550
Bethesda, MD 20817
PHONE: (202) 408-0960
FAX: (202) 408-0961

at&t
7150 STANDARD DRIVE
HANOVER, MD 21076

smartlink
1362 MELLON RD, STE 140
HANOVER, MD 21076
PHONE: (410) 582-8043
FAX: (410) 221-2962

PROJECT NO: 1152.400
DESIGNER: TMF
ENGINEER: C.S.

THESE DRAWINGS ARE FORMATTED TO BE FULL-SIZE AT 22"X34"
0 1/2 1
GRAPHIC SCALE IN INCHES

FA NUMBER: 15140160
SITE ID: 2874
RASIKA
616 E STREET NW
WASHINGTON, D.C. 20004

SUBMITTALS

DATE	DESCRIPTION	REVISION
04-22-2020	ADDITIONAL REDLINES	1
11-09-2020	REVISE POWER SOURCE	2
11-11-2020	COMMENTS	3
04-19-2021	EXPAND ANTENNA EMCLOSURE / ANTENNA CLEARANCES	4
08-23-2021	ADD ANTENNA ENCLOSURE STAIRS & UPDATE DC9'S	5

TITLE:

EQUIPMENT CABINET, LADDER & CONDUIT DETAILS

SHEET NUMBER:

S-13

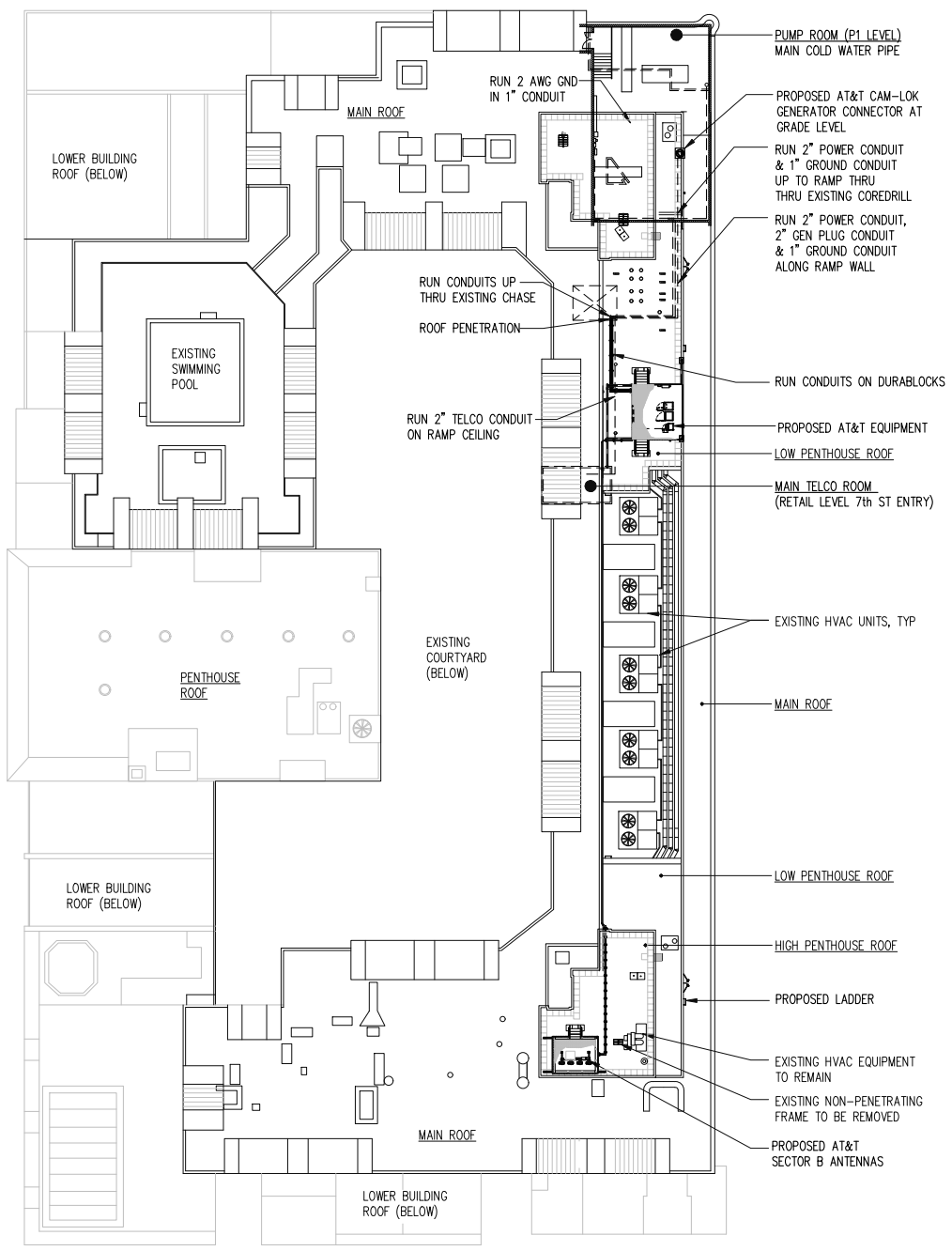

UTILITY ROUTING PLAN

SCALE: 1" = 30'-0"

1 E-1 TRUE NORTH

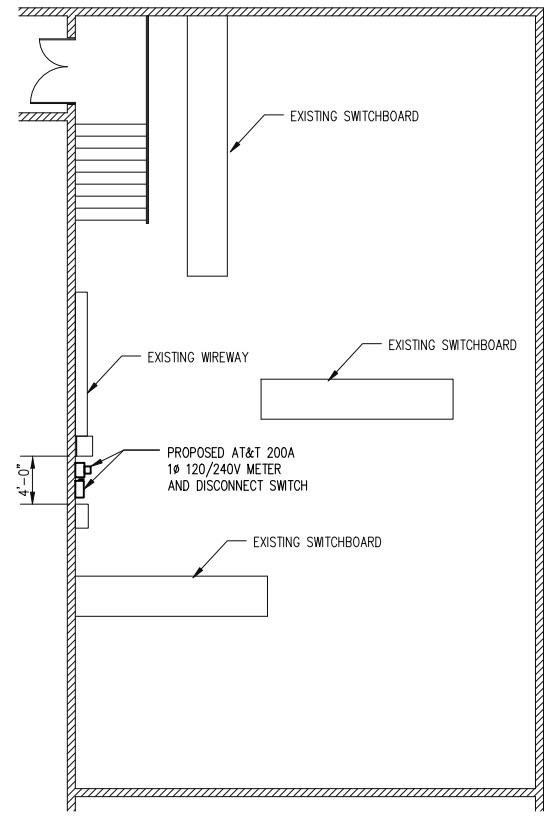

MAIN ELECT ROOM PLAN

SCALE: 1/8" = 1'-0"

2 E-1 TRUE NORTH

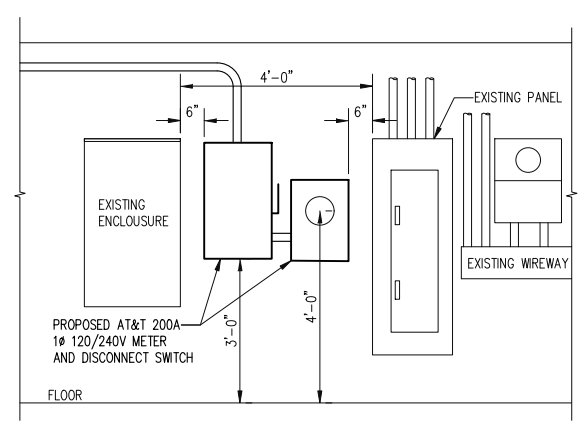

ELECTRICAL EQUIPMENT ELEVATION

SCALE: 1/2" = 1'-0"

3 E-1

PROPOSED AT&T PANEL									
120/240 VOLTS 1 PHASE 3 WIRE 200 AMP MCB									
DESCRIPTION	VA	BKR	CKT	ø A	ø B	CKT	BKR	VA	DESCRIPTION
RECTIFIER 1&2	1300	30	1	1300		2		–	SPACE
	1300		3		1300	4		–	SPACE
RECTIFIER 3&4	1300	30	5	1480		6	15	180	GFCI
	1300		7		1420	8	20	120	LIGHTS
RECTIFIER 5&6	1300	30	9	1300		10		–	SPACE
	1300		11		1300	12		–	SPACE
RECTIFIER 7&8	1300	30	13	1300		14		–	SPACE
	1300		15		1300	16		–	SPACE
RECTIFIER 9&10	1300	30	17	1300		18		–	SPACE
	1300		19		1300	20		–	SPACE
SPACE	–		21			22		–	SPACE
SPACE	–		23			24		–	SPACE
SPACE	–		25			26		–	SPACE
SPACE	–		27			28		–	SPACE
SPACE	–		29			30		–	SPACE
SPACE	–		31			32		–	SPACE
SPACE	–		33			34		–	SPACE
SPACE	–		35			36		–	SPACE
SPACE	–		37			38		–	SPACE
SPACE	–		39			40		–	SPACE
PHASE TOTALS:			6680	6620		TOTAL VA: 13300			

PANELBOARD CAPACITY: 48 kVA
PANELBOARD CONNECTED LOAD: 13.3 kVA
13.3 kVA x 1.25 = 16.63 kVA

THE CONNECTED LOAD DOES NOT EXCEED THE PANELBOARD'S CAPACITY.

BREAKER POSITION	BREAKER RATING	DESCRIPTION	-48V BUS
1	100	AIRSCALE RRH 4T4R B12/14/29	
2	100	AIRSCALE RRH 4T4R B12/14/29	
3	100	AIRSCALE RRH 4T4R B12/14/29	
4			
5	20	AIRSCALE RRH 4T4R B30 100W AHNA	
6	20	AIRSCALE RRH 4T4R B30 100W AHNA	
7	20	AIRSCALE RRH 4T4R B30 100W AHNA	
8			
9			
10			
11			
12			
13			
14			
15			
16			
17			
18			
19			
20	20	SAID	
21	20	SAID	
22	20	TRANSPORT NID	
23	40	FSM4	
24	40	FSM4	

BREAKER POSITION	BREAKER RATING	DESCRIPTION	-48V BUS
1	100	FLEX21	
2	100	FLEX21	
3			
4	50	AIRSCALE DUAL RRH 4T4R B25/66 320W AHFIB	
5	50	AIRSCALE DUAL RRH 4T4R B25/66 320W AHFIB	
6	50	AIRSCALE DUAL RRH 4T4R B25/66 320W AHFIB	
7			
8	25	AIRSCALE RRH 4T4R B5 160W AHCA	
9	25	AIRSCALE RRH 4T4R B5 160W AHCA	
10	25	AIRSCALE RRH 4T4R B5 160W AHCA	
11			
12			
13			
14			
15			
16			
17			
18			
19			
20			
21			
22			
23			
24			

DC POWER BREAKER SCHEDULE

SCALE: N.T.S.

DCRA

SEAL:

DISTRICT OF COLUMBIA
CAMILLE F. SHARSHAR
10657
PROFESSIONAL ENGINEER
REGISTERED

I AM RESPONSIBLE FOR DETERMINING THAT THE ENGINEERING DESIGNS INCLUDED IN THIS APPLICATION ARE IN COMPLIANCE WITH ALL RELEVANT LAWS AND REGULATIONS OF THE DISTRICT OF COLUMBIA. I HAVE PERSONALLY PREPARED, OR DIRECTLY SUPERVISED THE PREPARATION OF, THE ENGINEERING DESIGNS INCLUDED IN THIS APPLICATION

entrex
communication services, inc.
6600 Rockledge Drive, Suite 550
Bethesda, MD 20817
PHONE: (202) 408-0960
FAX: (202) 408-0961

at&t
7150 STANDARD DRIVE
HANOVER, MD 21076

smartlink
1362 MELLON RD, STE 140
HANOVER, MD 21076
PHONE: (410) 582-8043
FAX: (410) 221-2962

PROJECT NO: 1152.400
DESIGNER: N.B.
ENGINEER: C.S.

THESE DRAWINGS ARE FORMATTED TO BE FULL-SIZE AT 22"X34"
0 1/2 1
GRAPHIC SCALE IN INCHES

FA NUMBER: 15140160
SITE ID: 2874
RASIKA
616 E STREET NW
WASHINGTON, D.C. 20004

SUBMITTALS

DATE	DESCRIPTION	REVISION
04-22-2020	ADDITIONAL REDLINES	1
11-09-2020	REVISE POWER SOURCE	2
11-11-2020	COMMENTS	3
04-19-2021	EXPAND ANTENNA EMCLOSURE / ANTENNA CLEARANCES	4
08-23-2021	ADD ANTENNA ENCLOSURE STAIRS & UPDATE DC9'S	5

TITLE:

ELECTRICAL PLANS ELEVATION AND PANEL SCHEDULES

SHEET NUMBER:

E-1

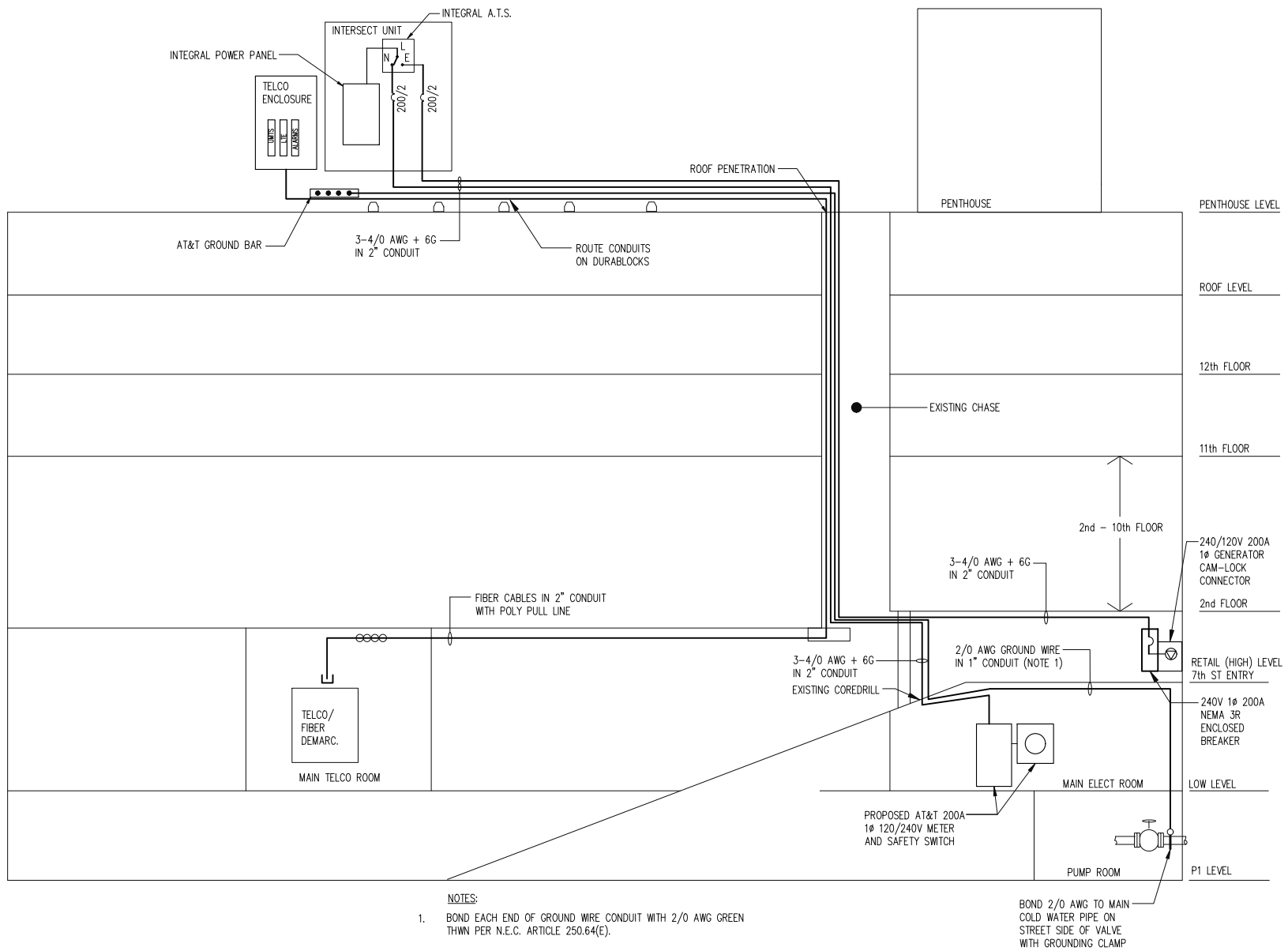

NOTES:

1. BOND EACH END OF GROUND WIRE CONDUIT WITH 2/0 AWG GREEN THWN PER N.E.C. ARTICLE 250.64(E).

UTILITY RISER DIAGRAM

SCALE: N.T.S.

1 / E-2

NOTES:
1. USE STANDARD STAINLESS STEEL HARDWARE FOR WALL CONNECTIONS.
2. SPACE SUPPORTS @ 6'-0" ON CENTER MAXIMUM.
3. DETAIL APPLIES TO BOTH VERTICAL AND HORIZONTAL CONDUIT RUNS.

UNISTRUT MOUNTING CHART	
WALL CONSTRUCTION TYPE	USE
HOLLOW	3/8"ø TOGGLE BOLT
HOLLOW, AT STUD	3/8"ø LAG SCREW
CONCRETE BLOCK (HOLLOW)	3/8"ø HILTI HY-70 (MIN. EMBEDMENT 2-1/2")
CONCRETE (SOLID)	3/8"ø HILTI HY-200 (MIN. EMBEDMENT 2-1/2")

1. CONDUIT OR INNERDUCT
2. BUTTERFLY CLAMP AS REQUIRED
3. EXISTING WALL ASSEMBLY
4. UNISTRUT P1000 'T' SERIES LENGTH BASED ON NUMBER OF CONDUIT TO BE MOUNTED

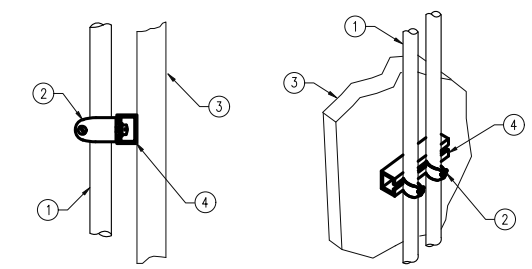

CONDUIT ON WALL DETAIL

SCALE: 3/4"=1'-0"

2 / E-2

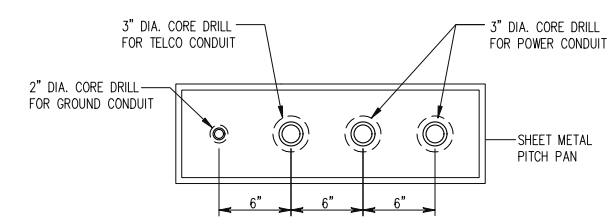

PLAN

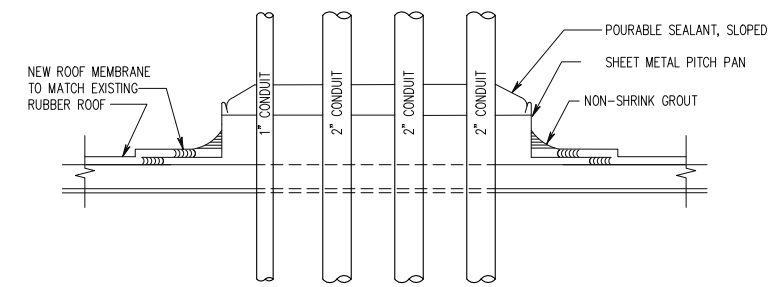

SECTION

ROOF PENETRATION DETAIL

SCALE: 1 1/2" = 1'-0"

4 / E-2

U.L. SYSTEM NO. CAJ1177
METAL PIPE/CONDUIT THROUGH CONCRETE FLOOR OR WALL

F RATING = 2 HR
T RATING = 0 HR

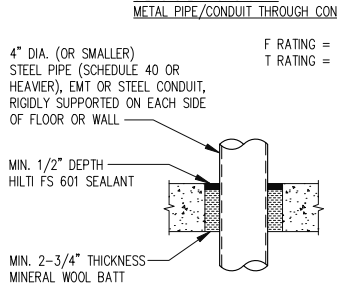

SECTION A-A

TOP VIEW

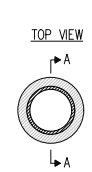

FLOOR OR WALL ASSEMBLY
MIN. 3-1/4" THICKNESS LIGHTWEIGHT OR NORMAL WEIGHT CONCRETE OR UL CLASSIFIED CONCRETE BLOCKS. MAX DIA OF OPENING IS 6".

U.L. SYSTEM NO. W-J-1020
METAL PIPE/CONDUIT THROUGH CONCRETE CONC OR CMU WALL

F RATING = 2 HR
T RATING = 0 HR

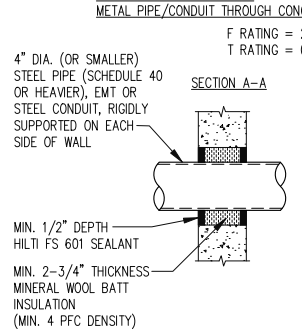

SECTION A-A

TOP VIEW

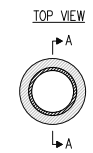

FLOOR OR WALL ASSEMBLY
MIN. 5" THICKNESS LIGHTWEIGHT OR NORMAL WEIGHT CONCRETE OR UL CLASSIFIED CONCRETE BLOCKS. MAX DIA OF OPENING IS 8".

FLOOR/WALL PENETRATION DETAIL (TYPICAL)

SCALE: N.T.S.

2 / E-2

DURABLOCK DB SERIES LENGTH CHART	
PART NUMBER	LENGTH
DB5	4.8"
DB10	9.6"
DB20	20.2"
DB30	30.8"
DB40	41.4"

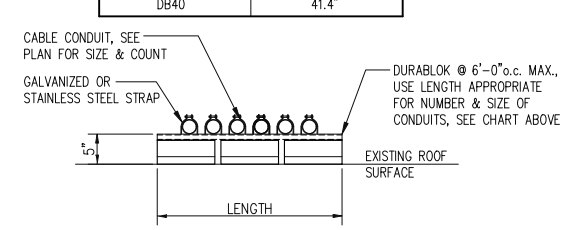

CONDUIT SUPPORT DETAIL

SCALE: 3/4"= 1'-0"

5 / E-2

DCRA

SEAL:

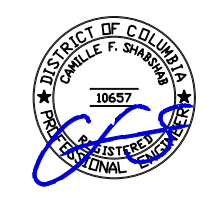

I AM RESPONSIBLE FOR DETERMINING THAT THE ENGINEERING DESIGNS INCLUDED IN THIS APPLICATION ARE IN COMPLIANCE WITH ALL RELEVANT LAWS AND REGULATIONS OF THE DISTRICT OF COLUMBIA. I HAVE PERSONALLY PREPARED, OR DIRECTLY SUPERVISED THE PREPARATION OF, THE ENGINEERING DESIGNS INCLUDED IN THIS APPLICATION

entrex communication services, inc.
6600 Rockledge Drive, Suite 550
Bethesda, MD 20817
PHONE: (202) 408-0960
FAX: (202) 408-0961

at&t
7150 STANDARD DRIVE
HANOVER, MD 21076

PROJECT NO:	1152.400
DESIGNER:	N.B
ENGINEER:	C.S.

THESE DRAWINGS ARE FORMATTED TO BE FULL-SIZE AT 22"X34"

0 1/2 1
GRAPHIC SCALE IN INCHES

smartlink
1362 MELLON RD, STE 140
HANOVER, MD 21076
PHONE: (410) 582-8043
FAX: (410) 221-2962

FA NUMBER: 15140160
SITE ID: 2874
RASIKA
616 E STREET NW
WASHINGTON, D.C. 20004

SUBMITTALS

DATE	DESCRIPTION	REVISION
04-22-2020	ADDITIONAL REDLINES	1
11-09-2020	REVISE POWER SOURCE	2
11-11-2020	COMMENTS	3
04-19-2021	EXPAND ANTENNA EMCLOSURE / ANTENNA CLEARANCES	4
08-23-2021	ADD ANTENNA ENCLOSURE STAIRS & UPDATE DC9'S	5

TITLE:

UTILITY RISER DIAGRAM AND DETAILS

SHEET NUMBER:

E-2

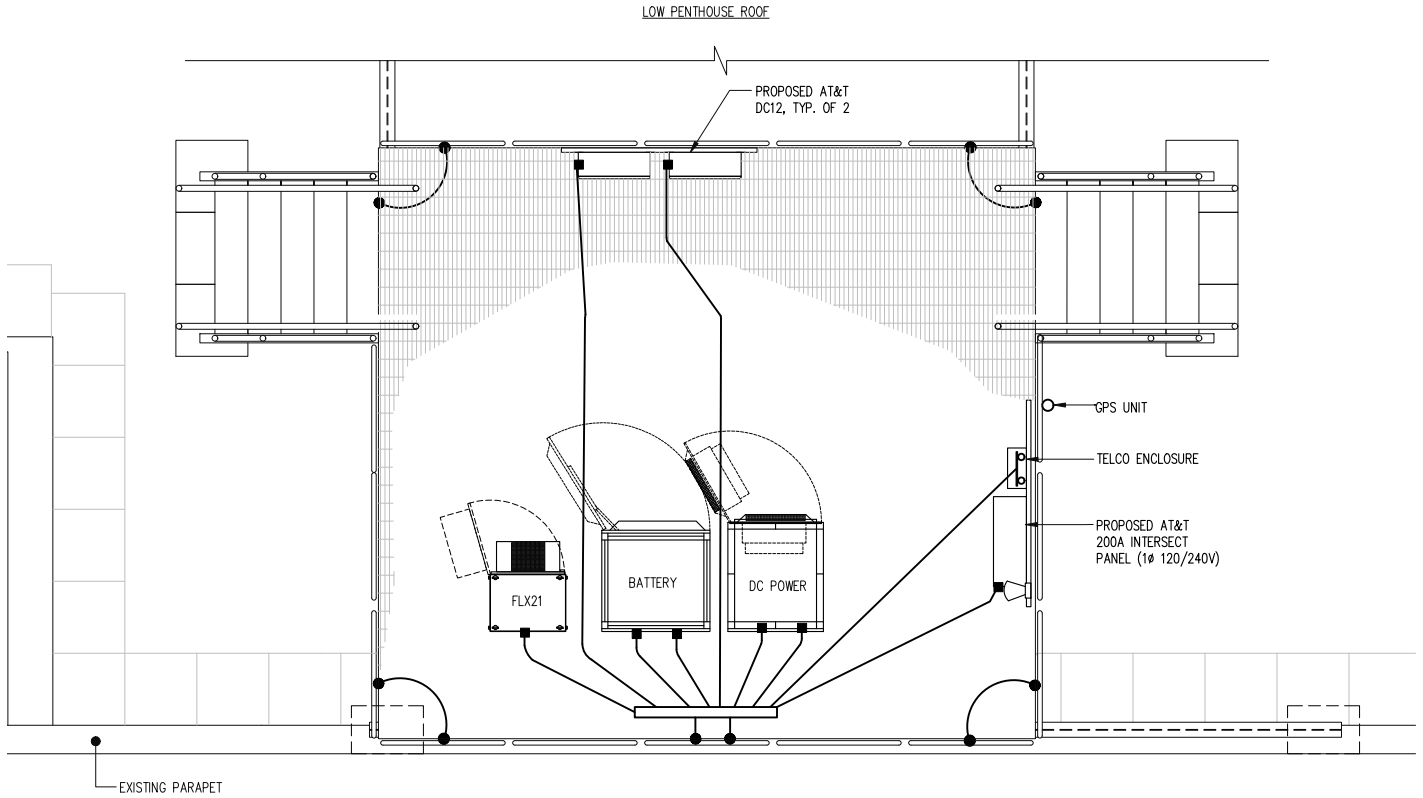

NOTE:
ALL GROUND WIRES SHOWN ARE 2 AWG GREEN-INSULATED UNLESS NOTED OTHERWISE.

EQUIPMENT GROUNDING PLAN

SCALE: 3/8"=1'-0"

1 / E-3

TRUE NORTH

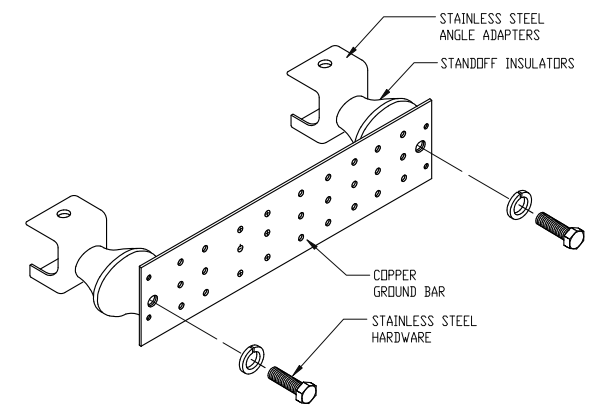

1. CELL REFERENCE COPPER GROUND BAR, 1/4"X 4"X 20" MOUNTED TO PLATFORM STEEL WITH ANGLE ADAPTERS.
2. SECTOR COPPER GROUND BAR, 1/4"X 4"X 12" MOUNTED TO SLED MOUNT ANGLES WITH ANGLE ADAPTERS.

GROUND BAR ISOMETRIC

SCALE: N.T.S.

3 / E-3

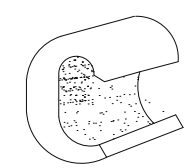

C-TYPE COPPER COMPRESSION TAP CONNECTS TWO COPPER CONDUCTORS TOGETHER COMPRESSED WITH A HYDRAULIC CRIMP TOOL.
MANUFACTURER: HARGER, INC., SERIES CT.

SHELTER INTERIOR C-TAP BONDING CONNECTION

SCALE: N.T.S.

4 / E-3

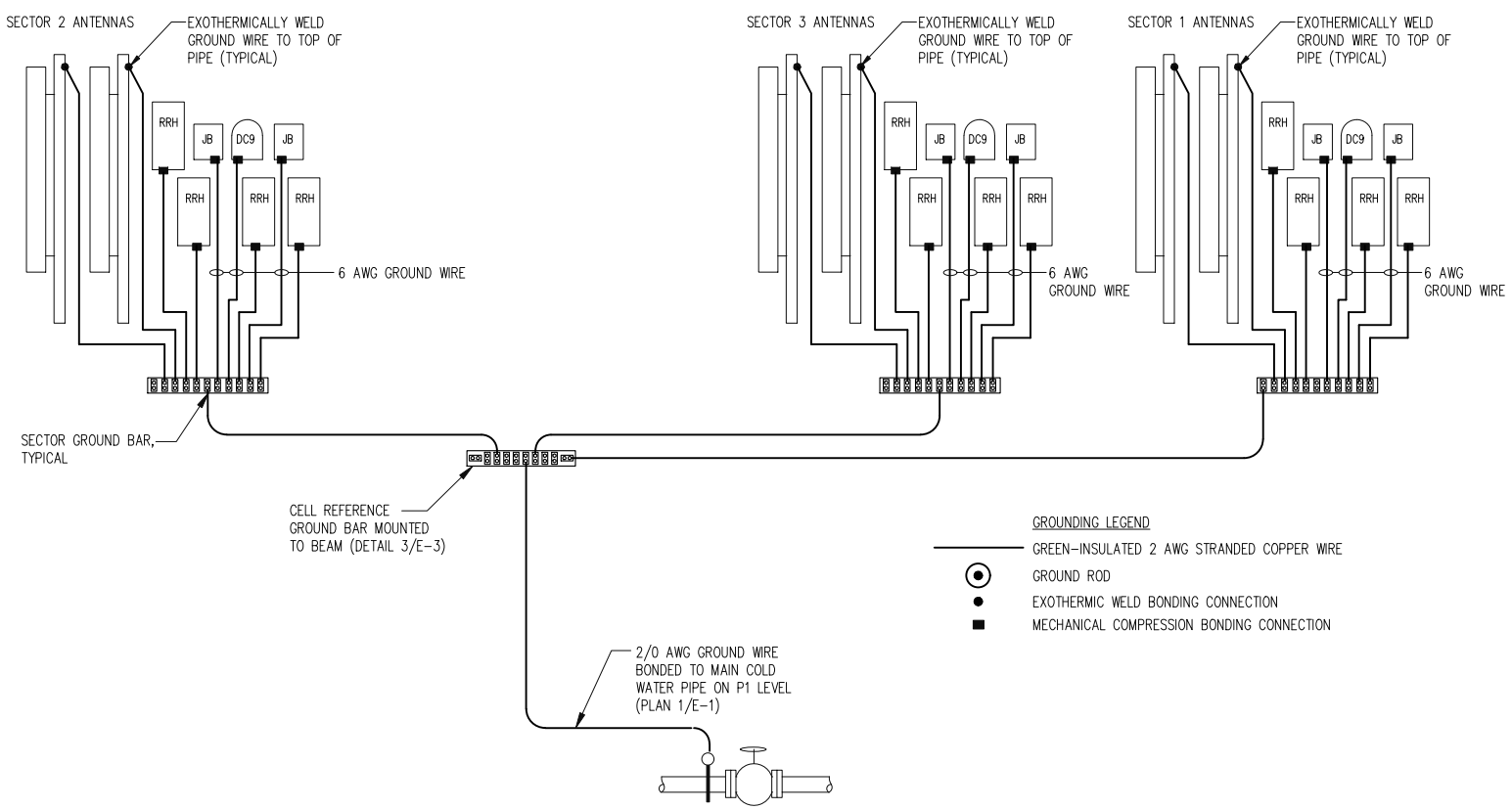

EQUIPMENT GROUNDING DETAIL

SCALE: 1"=1'-0"

2 / E-3

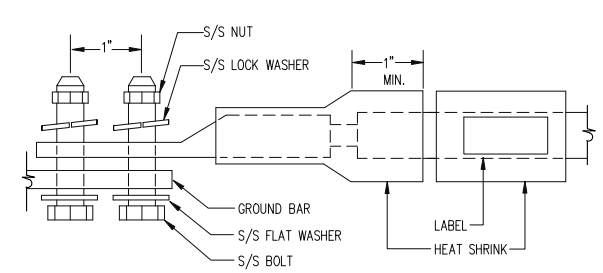

LUG NOTES:

1. ALL HARDWARE IS 18-8 STAINLESS STEEL INCLUDING LOCK WASHERS.
2. ALL HARDWARE SHALL BE S/S 3/8-INCH DIAMETER OR LARGER.
3. FOR GROUND BOND TO STEEL ONLY: INSERT A DRAGON-TOOTH WASHER BETWEEN LUG AND STEEL AND COAT ALL SURFACES WITH ANTI-OXIDIZATION COMPOUND PRIOR TO MATING.

LUG DETAIL

SCALE: TO SCALE

5 / E-3

DCRA

SEAL:

DISTRICT OF COLUMBIA
CAMILLE F. SHABSHAB
10657
REGISTERED PROFESSIONAL ENGINEER

I AM RESPONSIBLE FOR DETERMINING THAT THE ENGINEERING DESIGNS INCLUDED IN THIS APPLICATION ARE IN COMPLIANCE WITH ALL RELEVANT LAWS AND REGULATIONS OF THE DISTRICT OF COLUMBIA. I HAVE PERSONALLY PREPARED, OR DIRECTLY SUPERVISED THE PREPARATION OF, THE ENGINEERING DESIGNS INCLUDED IN THIS APPLICATION

entrex communication services, inc.
6600 Rockledge Drive, Suite 550
Bethesda, MD 20817
PHONE: (202) 408-0960
FAX: (202) 408-0961

at&t
7150 STANDARD DRIVE
HANOVER, MD 21076

smartlink
1362 MELLON RD, STE 140
HANOVER, MD 21076
PHONE: (410) 582-8043
FAX: (410) 221-2962

PROJECT NO:	1152.400
DESIGNER:	N.B.
ENGINEER:	C.S.

THESE DRAWINGS ARE FORMATTED TO BE FULL-SIZE AT 22"X34"
0 1/2 1
GRAPHIC SCALE IN INCHES

FA NUMBER: 15140160
SITE ID: 2874
RASIKA
616 E STREET NW
WASHINGTON, D.C. 20004

SUBMITTALS

DATE	DESCRIPTION	REVISION
04-22-2020	ADDITIONAL REDLINES	1
11-09-2020	REVISE POWER SOURCE	2
11-11-2020	COMMENTS	3
04-19-2021	EXPAND ANTENNA EMCLOSURE / ANTENNA CLEARANCES	4
08-23-2021	ADD ANTENNA ENCLOSURE STAIRS & UPDATE DC9'S	5

TITLE:

GROUNDING PLAN, DIAGRAM AND DETAILS

SHEET NUMBER:

E-3

EXHIBIT 8

Raycap

800.755.0689 • raycap.com

AT20-00202W-17
RASIKA

©2020 RAYCAP, INC. ALL RIGHTS RESERVED.
SIMULATION IS AN APPROXIMATE REPRESENTATION OF OUR PROPOSED CONCEALMENT SOLUTION. ACTUAL CONCEALMENT(S) MAY VARY.

Raycap

800.755.0689 • raycap.com

AT20-00202W-17
RASIKA

©2020 RAYCAP, INC. ALL RIGHTS RESERVED.
SIMULATION IS AN APPROXIMATE REPRESENTATION OF OUR PROPOSED CONCEALMENT SOLUTION. ACTUAL CONCEALMENT(S) MAY VARY.

EXHIBIT 9

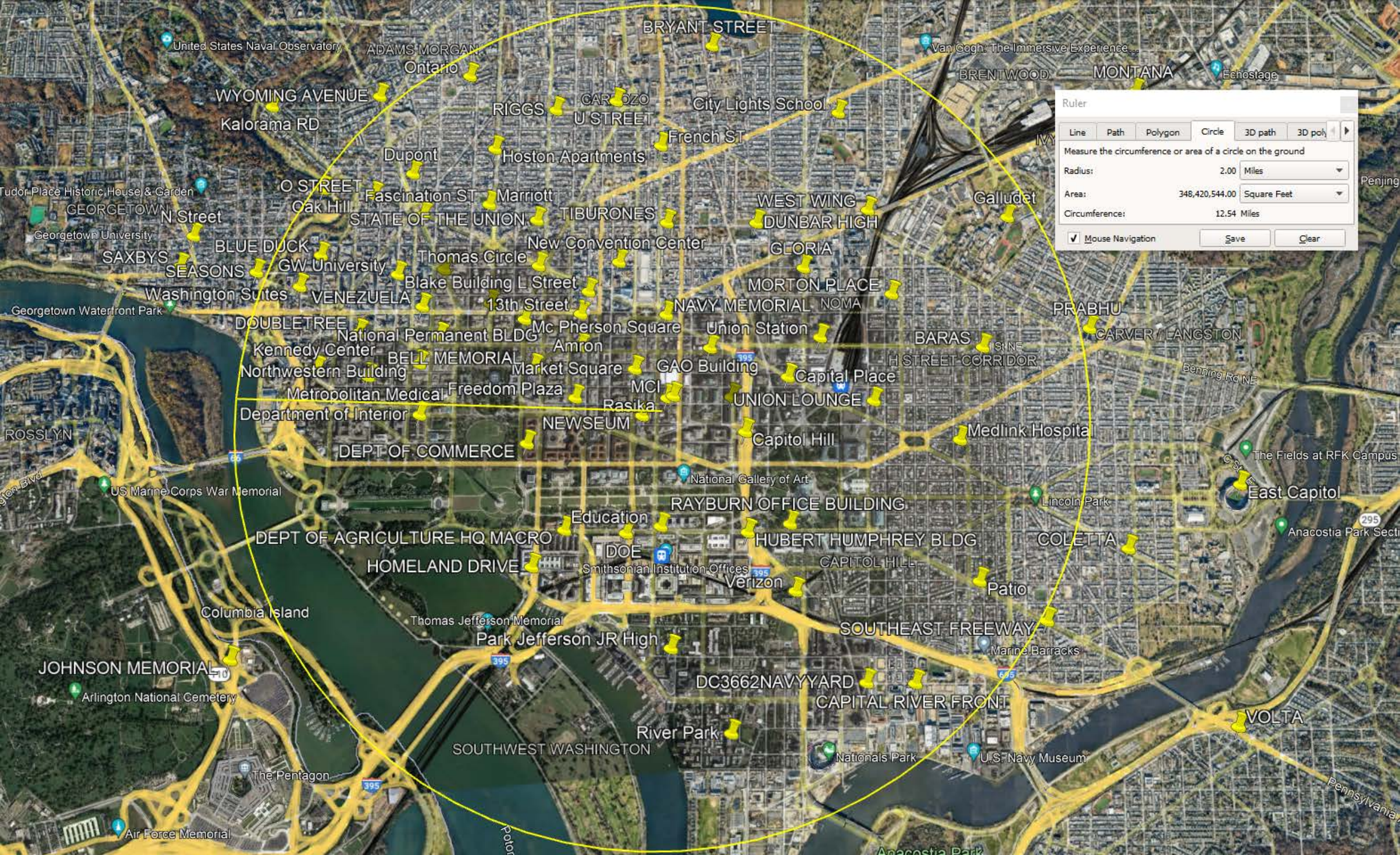

Ruler
Line
Path
Polygon
Circle
3D path
3D poly
Measure the circumference or area of a circle on the ground
Radius: 2.00 Miles
Area: 348,420,544.00 Square Feet
Circumference: 12.54 Miles
Mouse Navigation
Save
Clear
BRYANT STREET
United States Naval Observatory
ADAMS MORGAN
Ontario
Van Gogh: The Immersive Experience...
BRENTWOOD
MONTANA
Echostage
WYOMING AVENUE
Kalorama RD
RIGGS
CARDOZO
U STREET
City Lights School
French ST
Dupont
Hoston Apartments
Tudor Place Historic House & Garden
O STREET
Fascination ST
Marriott
Oak Hill
GEORGETOWN
N Street
STATE OF THE UNION
TIBURONES
WEST WING
DUNBAR HIGH
Galludet
Georgetown University
BLUE DUCK
New Convention Center
GLORIA
SAXBYS
SEASONS
GW University
Thomas Circle
Blake Building L Street
MORTON PLACE
Washington Suites
VENEZUELA
13th Street
NAVY MEMORIAL
NOMA
PRABHU
Georgetown Waterfront Park
DOUBLETREE
National Permanent BLDG
Mc Pherson Square
Union Station
BARAS
CARVER / LANGSTON
Kennedy Center
Amron
BELL MEMORIAL
H STREET CORRIDOR
Northwestern Building
Market Square
GAO Building
Capital Place
Benning Rd NE
Metropolitan Medical
Freedom Plaza
MCI
UNION LOUNGE
Department of Interior
Rasika
NEWSEUM
ROSSLYN
Capitol Hill
Medlink Hospital
DEPT OF COMMERCE
The Fields at RFK Campus
National Gallery of Art
US Marine Corps War Memorial
East Capitol
RAYBURN OFFICE BUILDING
Lincoln Park
Education
Anacostia Park Secti
DEPT OF AGRICULTURE HQ MACRO
HUBERT HUMPHREY BLDG
COLETTA
DOE
HOMELAND DRIVE
Smithsonian Institution Offices
CAPITOL HILL
Verizon
Patio
Columbia Island
Thomas Jefferson Memorial
SOUTHEAST FREEWAY
Park Jefferson JR High
Marine Barracks
JOHNSON MEMORIAL
DC3662NAVYYARD
Arlington National Cemetery
CAPITAL RIVER FRONT
VOLTA
River Park
SOUTHWEST WASHINGTON
Nationals Park
U.S. Navy Museum
The Pentagon
Pennsylvania
Air Force Memorial
Anacostia Park

CSS_FA_LOCATION	Status	Name	Latitude	Longitude	Address	City	State	County	Zip
10036011	On-Air	METROPOLITAN MEDICAL	38.897214	-77.047314	2112 F STREET NORTHWEST	WASHINGTON	DC	DIST OF COLUMBIA	20037
10036012	On-Air	GW UNIVERSITY	38.904337	-77.045134	1120 20TH STREET NORTHWEST	WASHINGTON	DC	DIST OF COLUMBIA	20036
10036013	On-Air	1130 CONNECTICUT AVENUE	38.904682	-77.041077	1130 CONNECTICUT AVENUE NORTHWEST	WASHINGTON	DC	DIST OF COLUMBIA	20036
10036014	On-Air	MC PHERSON SQUARE	38.901182	-77.033859	811 VERMONT AVENUE NORTHWEST	WASHINGTON	DC	DIST OF COLUMBIA	20571
10036015	On-Air	13TH STREET	38.901564	-77.028956	1225 I STREET NORTHWEST DUP1	WASHINGTON	DC	DIST OF COLUMBIA	20005
10036016	On-Air	FREEDOM PLAZA	38.89576	-77.029265	1275 PENNSYLVANIA AVENUE NORTHWEST	WASHINGTON	DC	DIST OF COLUMBIA	20004
10036017	On-Air	MARKET SQUARE	38.897739	-77.024133	901 F STREET NORTH WEST	WASHINGTON	DC	DIST OF COLUMBIA	20004
10036018	On-Air	MCI	38.895886	-77.020747	600 EAST STREET NORTHWEST	WASHINGTON	DC	DIST OF COLUMBIA	20049
10036019	On-Air	CAPITOL HILL	38.893436	-77.014475	200 CONSTITUTION AVENUE NORTHWEST	WASHINGTON	DC	DIST OF COLUMBIA	20210
10036020	On-Air	UNION STATION	38.899953	-77.008002	750 FIRST SREET NORTH WEST	WASHINGTON	DC	DIST OF COLUMBIA	20001
10036023	On-Air	VERIZON	38.88276	-77.01007	30 EAST STREET SOUTHWEST	WASHINGTON	DC	DIST OF COLUMBIA	20024
10036024	On-Air	EDUCATION	38.887059	-77.021639	600 INDEPENDENCE AVENUE SOUTHWEST	WASHINGTON	DC	DIST OF COLUMBIA	20024
10036036	On-Air	NATIONAL PERMANENT BLDG	38.90001389	-77.04121944	1775 PENNSYLVANIA AVENUE NORTHWEST	WASHINGTON	DC	DIST OF COLUMBIA	20006
10036072	On-Air	DUPONT	38.91145	-77.044158	1601 CONNECTICUT AVENUE NORTHWEST	WASHINGTON	DC	DIST OF COLUMBIA	20009
10036073	On-Air	MARRIOTT	38.909272	-77.037294	1400 16TH STREET NORTHWEST	WASHINGTON	DC	DIST OF COLUMBIA	20036
10036116	On-Air	WASHINGTON SUITES	38.903464	-77.053697	2500 PENNSYLVANIA AVENUE NORTHWEST DUP1	WASHINGTON	DC	DIST OF COLUMBIA	20037
10036117	On-Air	NEW CONVENTION CENTER	38.905172	-77.025693	930 M STREET NORTHWEST	WASHINGTON	DC	DIST OF COLUMBIA	20001
10036775	On-Air	DEPARTMENT OF INTERIOR	38.89459	-77.04271	1849 C STREET NORTHWEST	WASHINGTON	DC	DIST OF COLUMBIA	20240
10036781	On-Air	THOMAS CIRCLE	38.904917	-77.03275	1120 VERMONT AVENUE NORTHWEST	WASHINGTON	DC	DIST OF COLUMBIA	20005
10069728	On-Air	CITY LIGHTS SCHOOL	38.9158	-77.0064	62 T STREET NORTHEAST	WASHINGTON	DC	DIST OF COLUMBIA	20002
10069730	On-Air	GALLUDET	38.908364	-76.991478	800 FLORIDA AVENUE NORTHEAST	WASHINGTON	DC	DIST OF COLUMBIA	20002
10069732	On-Air	RIVER PARK	38.873508	-77.015411	1311 DELAWARE AVENUE SOUTHWEST	WASHINGTON	DC	DIST OF COLUMBIA	20024
10069736	On-Air	HOSTON APARTMENTS	38.91325	-77.036944	1712 16TH STREET NORTHWEST	WASHINGTON	DC	DIST OF COLUMBIA	20009
10071360	On-Air	AMRON	38.8993	-77.0289	725 13TH STREET NORTHWEST	WASHINGTON	DC	DIST OF COLUMBIA	20005
10071364	On-Air	BLAKE BUILDING L STREET	38.9031	-77.028297	1100 L STREET NORTHWEST	WASHINGTON	DC	DIST OF COLUMBIA	20005
10071365	On-Air	CAPITAL PLACE	38.897202	-77.010803	50 F STREET NORTHWEST	WASHINGTON	DC	DIST OF COLUMBIA	20001
10071375	On-Air	DOE	38.886592	-77.024597	1000 INDEPENDENCE AVENUE SOUTHWEST	WASHINGTON	DC	DIST OF COLUMBIA	20585
10071378	On-Air	FASCINATION ST	38.908513	-77.043088	1350 CONNECTICUT AVENUE	WASHINGTON	DC	DIST OF COLUMBIA	20036
10071379	On-Air	PATIO	38.883411	-76.9944	801 PENNSYLVANIA AVENUE	WASHINGTON	DC	DIST OF COLUMBIA	20003
10071382	On-Air	GAO BUILDING	38.8992	-77.0176	441 G STREET NORTHWEST	WASHINGTON	DC	DIST OF COLUMBIA	20548
10071384	On-Air	OAK HILL	38.9104	-77.0521	2500 Q STREET NORTHWEST	WASHINGTON	DC	DIST OF COLUMBIA	20007
10071389	On-Air	KENNEDY CENTER	38.897705	-77.051804	2440 VIRGINIA AVENUE	WASHINGTON	DC	DIST OF COLUMBIA	20037
10071390	On-Air	FRENCH ST	38.9135	-77.0222	1730 7TH STREET NORTHWEST	WASHINGTON	DC	DIST OF COLUMBIA	20001
10071393	On-Air	MEDLINK HOSPITAL	38.892883	-76.995911	700 CONSTITUTION AVENUE SOUTHEAST	WASHINGTON	DC	DIST OF COLUMBIA	20002
10071395	On-Air	NORTHWESTERN BUILDING	38.8981	-77.0429	1800 G STREET NORTHWEST	WASHINGTON	DC	DIST OF COLUMBIA	20036
10071398	On-Air	PARK JEFFERSON JR HIGH	38.879003	-77.0206	905 6TH STREET SOUTHWEST	WASHINGTON	DC	DIST OF COLUMBIA	20024
10071883	On-Air	WORLD CENTER BLDG	38.9023	-77.0369	918 16TH STREET NORTHWEST	WASHINGTON	DC	DIST OF COLUMBIA	20006
10071889	On-Air	ONTARIO	38.9185	-77.039397	1701 FLORIDA AVENUE NORTHWEST	WASHINGTON	DC	DIST OF COLUMBIA	20009
10127312	On-Air	DC3662NAVYYARD	38.876777	-77.004048	1100 NEW JERSEY AVENUE SOUTHEAST	WASHINGTON	DC	DIST OF COLUMBIA	20003
10129532	On-Air	RAYBURN OFFICE BUILDING	38.887222	-77.010556	50 INDEPENDENCE AVENUE	WASHINGTON	DC	DIST OF COLUMBIA	20001
10130429	On-Air	BLUE DUCK	38.905664	-77.051972	2401 M STREET NORTHWEST DUP	WASHINGTON	DC	DIST OF COLUMBIA	20037
10131988	On-Air	DEPT OF COMMERCE	38.892642	-77.033344	1401 CONSTITUTION AVENUE NORTHWEST	WASHINGTON	DC	DIST OF COLUMBIA	20230
10131989	On-Air	HUBERT HUMPHREY BLDG	38.886667	-77.014167	200 INDEPENDENCE AVENUE SOUTHWEST	WASHINGTON	DC	DIST OF COLUMBIA	20024
10134869	On-Air	STATE OF THE UNION	38.908146	-77.033033	1430 RHODE ISLAND AVENUE NORTHWEST	WASHINGTON	DC	DIST OF COLUMBIA	20005
10134873	On-Air	TIBURONES	38.907947	-77.021539	1301 7TH STREET NORTHWEST	WASHINGTON	DC	DIST OF COLUMBIA	20001
10134876	On-Air	VENEZUELA	38.902047	-77.042817	1850 K STREET NORTHWEST	WASHINGTON	DC	DIST OF COLUMBIA	20006
10138150	On-Air	HOMELAND DRIVE	38.88435	-77.0326	401 14TH STREET SOUTHWEST	WASHINGTON	DC	DIST OF COLUMBIA	20227
10140946	On-Air	O STREET	38.909952	-77.047536	2121 P STREET NORTHWEST DUP1	WASHINGTON	DC	DIST OF COLUMBIA	20037
10140947	On-Air	NEWSEUM	38.894544	-77.023414	801 PENNSYLVANIA AVENUE NORTHWEST	WASHINGTON	DC	DIST OF COLUMBIA	20004

10143922	On-Air	DOUBLETREE	38.900258	-77.048266	801 22ND STREET NORTHWEST	WASHINGTON	DC	DIST OF COLUMBIA	20052
10552426	On-Air	U STREET	38.916716	-77.026262	1000 U STREET NORTHWEST	WASHINGTON	DC	DIST OF COLUMBIA	20001
10552429	On-Air	CAPITAL RIVER FRONT	38.876723	-76.999943	410 M STREET SOUTHEAST	WASHINGTON	DC	DIST OF COLUMBIA	20003
10578938	On-Air	WYOMING AVENUE	38.916973	-77.047346	2000 CONNECTICUT AVENUE NORTHWEST	WASHINGTON	DC	DIST OF COLUMBIA	20008
10578941	On-Air	BRYANT STREET	38.92075	-77.01775	2225 4TH STREET NORTHWEST	WASHINGTON	DC	DIST OF COLUMBIA	20059
10578942	On-Air	MORTON PLACE	38.9029556	-77.0017472	1005 3RD STREET NORTHEAST	WASHINGTON	DC	DIST OF COLUMBIA	20002
10578984	On-Air	NAVY MEMORIAL	38.901498	-77.021454	650 MASSACHUSETTS AVENUE NORTHWEST	WASHINGTON	DC	DIST OF COLUMBIA	20001
10578989	On-Air	BARAS	38.8992556	-76.9937583	900 G STREET NORTHEAST	WASHINGTON	DC	DIST OF COLUMBIA	20002
11565449	On-Air	DUNBAR HIGH	38.907951	-77.013647	1301 NEW JERSEY AVENUE NORTHWEST	WASHINGTON	DC	DIST OF COLUMBIA	20001
11587629	On-Air	BELL MEMORIAL	38.897857	-77.032917	655 15TH STREET NORTHWEST	WASHINGTON	DC	DIST OF COLUMBIA	20005
11653549	On-Air	RIGGS	38.916064	-77.031619	1919 14TH STREET NORTHWEST	WASHINGTON	DC	DIST OF COLUMBIA	20009
11680127	On-Air	GLORIA	38.904784	-77.009454	1140 NORTH CAPITOL STREET NORTHWEST	WASHINGTON	DC	DIST OF COLUMBIA	20002
12719615	On-Air	DC COURT	38.89581	-77.015681	441 4TH STREET NORTHWEST	WASHINGTON	DC	DIST OF COLUMBIA	20001
12729262	On-Air	WEST WING	38.90886778	-77.00379889	100 FLORIDA AVENUE NORTHEAST	WASHINGTON	DC	DIST OF COLUMBIA	20002
12811254	On-Air	DEPT OF AGRICULTURE HQ MACRO	38.886797	-77.029886	1300 INDEPENDENCE AVENUE SOUTHWEST	WASHINGTON	DC	DIST OF COLUMBIA	20004
12832450	On-Air	UNION LOUNGE	38.89555556	-77.00333333	415 2ND STREET NORTHEAST	WASHINGTON	DC	DIST OF COLUMBIA	20002
12924927	On-Air	SEASONS	38.904485	-77.05758278	2800 PENNSYLVANIA AVENUE NORTHWEST DUP1	WASHINGTON	DC	DIST OF COLUMBIA	20007