LIST OF DRAWINGS

A–000	COVER SHEET
A–001	STRUCTURAL & ELECTRICAL PLANS
A–002	DETAILS

PROJECT NARRATIVE

SCOPE OF WORK IS A NEW FRONT PORCH.

PIVS DATA & APPLICABLE CODES

ADDRESS: 5332 41ST STREET NW,
WASHINGTON, DC. 20015
SSL 1742 0048
CLUSTER 11
WARD 3
ANC 3E
SMD 3E04
ZONE R–2

2015 IRC Codes
Title 12 DCMR, DC Construction Codes Supplement (2017)
DCMR 12 DC Construction Code Supplement (2017)
2017 District of Columbia Building Code
2017 District of Columbia Fire Code
2017 District of Columbia Plumbing Code
2017 District of Columbia Property Maintenance Code
2017 District of Columbia Green Construction Code
2017 District of Columbia Energy Conservation Code
2014 National Electric Code

ZONING ANALYSIS - R-2

CATEGORY	REQUIRED	EXISTING	PROPOSED
MAXIMUM LOT OCCUPANCY:	40%	972 SF/55.3%	993 SF/56.5%
MINIMUM LOT AREA:	4000 SF	1,757 SF	NO CHANGE
MINIMUM LOT WIDTH:	40'–0"	19'–0"	NO CHANGE
FRONT YARD SETBACK:	RANGE OF EXISTING STRUCTURES		8'–0"/COMPLIES
SIDE SETBACK:	8'–0"	0'–0"	NO CHANGE
HEIGHT:	40'–0"	28'–0"	NO CHANGE

*PORTION OF PORCH LOCATED BEYOND PROPERTY LINE IN PUBLIC SPACE. NUMBERS ABOVE REFLECT THE EXTENT OF PORCH LOCATED ON PRIVATE PROPERTY

SYMBOL LEGEND

EXISTING DEMISING WALLS. THICKNESS, RATING & TYPE VARY. FIELD VERIFY AS NEEDED
NEW PARTITION
CEILING HEIGHT (X'–X")
BUILDING SECTION (# / A–#)
ELEVATION (# / A–#)

SITE LOCATION

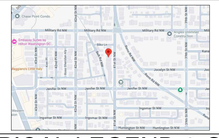

ELECTRICAL LEGEND & SCHEDULE

DAMP RATED EXTERIOR CEILING FAN, ENERGY STAR RATED, 1100 LUMENS, 10W LED
WP WEATHERPROOF OUTLET
WALL SCONCE (EXTERIOR RATED)
$ ONE WAY SWITCH

1. LUMINARIES SHALL BE SUPPORTED IN ACCORDANCE WITH NEC 410.30 & 410.36 (B)

GENERAL NOTES

1. THE GENERAL CONTRACTOR SHALL VISIT THE SITE, VERIFY EXISTING CONDITIONS AND DIMENSIONS NEEDED FOR THE PROJECT, PRIOR TO COMMENCING OF CONSTRUCTION AND REPORT ANY DISCREPANCIES OR UNCOVERED CONDITIONS TO THE ARCHITECT. NOTE THAT NO CLAIM FOR ADDITIONAL COSTS SHALL BE CONSIDERED DUE TO THE FAILURE OF EXAMINING EXISTING CONDITIONS WHICH MAY AFFECT NEW WORK.
2. EACH CONTRACTOR, SUBCONTRACTOR AND TRADE SHALL BE FAMILIAR WITH THE ENTIRE SET OF DRAWINGS AND SPECIFICATIONS INCLUDING MECHANICAL, ELECTRICAL, PLUMBING AND ANY OTHER SUBSEQUENT DRAWINGS AND ADDENDA.
3. ALL WORK SHALL BE PERFORMED IN ACCORDANCE WITH THE LATEST ADOPTED FEDERAL, STATE AND LOCAL BUILDING CODES AND REQUIREMENTS OF ALL REGULATORY AUTHORITIES HAVING JURISDICTION.
4. INSTALL AND APPLY ITEMS, MATERIALS, EQUIPMENT, FINISHES, ETC., INCLUDING THE PREPARATION OF SURFACES, IN STRICT ACCORDANCE WITH THE MANUFACTURERS PRINTED RECOMMENDATIONS AND INSTALLATION REQUIREMENTS.
5. THE GENERAL CONTRACTOR SHALL COORDINATE REQUIREMENTS FOR ALL RELATED TRADES AND SUBCONTRACTORS, INCLUDING OWNERS' REQUIREMENTS.
6. ALL WORK SHALL BE PERFORMED WITH THE BEST ACCEPTED PRACTICES OF THE RESPECTIVE TRADES AND ASSOCIATIONS.
7. ALL MATERIALS SHALL BE INSTALLED IN STRICT ACCORDANCE WITH MANUFACTURER'S RECOMMENDATIONS, INSTRUCTIONS AND SPECIFICATIONS, INCLUDING CONNECTIONS TO ADJACENT MATERIALS.
8. EXISTING AFFECTED WORK SHALL BE PREPARED TO MATCH EXISTING & TO MEET NEW CONDITIONS.
9. THE CONTRACTOR SHALL PROTECT ALL EXISTING AREAS FROM DAMAGE.
10. ALL REMOVED MATERIALS, EXCEPT AS THE OWNER MAY ELECT TO KEEP, SHALL BECOME THE PROPERTY OF THE GENERAL CONTRACTOR AND SHALL BE REMOVED FROM THE SITE AND LEGALLY DISPOSED OF.
11. REMOVE ALL RUBBISH AND CONSTRUCTION DEBRIS ON A DAILY BASIS, AND LEAVE THE CONSTRUCTION AREA BROOM CLEAN.
12. A COMPLETE SET OF CONSTRUCTION DRAWINGS SHALL BE AT THE PROJECT SITE AT ALL TIMES.
13. THE GENERAL CONTRACTOR SHALL SUBMIT WRITTEN GUARANTEE FOR HIS MATERIALS AND WORKMANSHIP FOR (1) ONE YEAR FROM THE DATE OF FINAL ACCEPTANCE BY THE OWNER.
14. BEFORE COMMENCING WORK, THE CONTRACTOR SHALL BECOME FAMILIAR WITH THE DRAWINGS, SCOPE OF WORK AND VERIFY EXISTING CONDITIONS AND DIMENSIONS AT THE SITE AND NOTIFY THE ARCHITECT OF ANY DISCREPANCIES.
15. ALL WORK DESCRIBED OR INDICATED IN THESE DOCUMENTS AND ALL WORK DEPENDANT UPON OR NECESSARY TO COMPLETE THIS WORK SHALL BE EXECUTED IN A WORKMAN LIKE MANNER CONSISTENT WITH THE BEST STANDARDS OF THE TRADE INVOLVED AND BE OF ITEMS AND MATERIALS SUITED FOR THE PURPOSE INTENDED.
16. TRADESMEN, CRAFTSMEN, INSTALLERS, FOREMEN, SUPERVISORS AND SUBCONTRACTORS SHALL BE SKILLED, EXPERIENCED AND LICENSED IF REQUIRED IN THE WORK THEY WILL BE PERFORMING.
17. PROJECT CONSTRUCTION ITEMS TO BE NEW, UNLESS NOTED OTHERWISE. NO SUBSTITUTIONS WILL BE ALLOWED UNLESS COMPLETE DESCRIPTIONS OF ITEMS INCLUDING DRAWINGS, TEST DATA, SAMPLES, COST AND SCHEDULE CHANGES ARE SUBMITTED BY THE CONTRACTOR AND APPROVED BY THE ARCHITECT PRIOR TO INSTALLATION. ANY ITEM NOTED ON THE DRAWINGS THAT ARE NOT AVAILABLE OR WOULD CAUSE A TIME DELAY SHALL BE IDENTIFIED BY THE GENERAL CONTRACTOR AND THE ARCHITECT NOTIFIED.
18. DIMENSION LINES ARE TO THE FACE OF FINISH ON EXISTING AND NEW WORK, UNLESS NOTED AS FACE OF STUD OR MASONRY OR CENTERLINE OR OTHERWISE. DIMENSIONS SHALL HAVE PRECEDENCE OVER SCALE AND LARGER SCALE DRAWINGS SHALL HAVE PRECEDENCE OVER SMALLER SCALE DRAWINGS.
19. THE CONTRACTOR SHALL NOTIFY THE ARCHITECT OF ALL REVISIONS TO THE DRAWINGS AND CHANGES WITH SCOPE OF WORK OR SCHEDULE REQUIRED BY GOVERNING AGENCIES, FIELD CONDITIONS, REGARDLESS OF EXTENT. ALL REVISIONS TO BE IN WRITING AS CHANGE ORDERS AND APPROVED PRIOR TO STARTING WORK.
20. G.C. SHALL FURNISH AND INSTALL FIREPROOF BLOCKING IN CEILINGS OR PARTITIONS.
21. ALL EXISTING CONSTRUCTION TO REMAIN SHALL BE PATCHED AND REPAIRED AS REQUIRED TO RECEIVE NEW FINISH PER THE FINISH SCHEDULE OR OTHERWISE INDICATED ON THE PLANS.
22. CONTRACTOR TO PROVIDE ALL MATERIAL AND LABOR REQUIRED TO MAKE FINAL CONNECTIONS TO ALL UTILITIES AND SYSTEMS, INCLUDING ITEMS SUPPLIED BY OWNER, SO THAT ALL UTILITIES AND SYSTEMS ARE FULLY FUNCTIONAL, UNLESS SPECIFIED OTHERWISE.

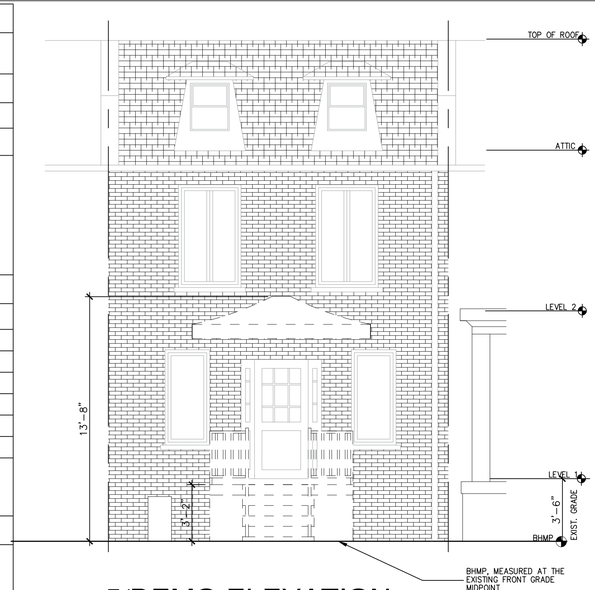

5/DEMO ELEVATION

SCALE: 1/4" = 1'-0"



4/FRONT ELEVATION - NEW

SCALE: 1/4" = 1'-0"

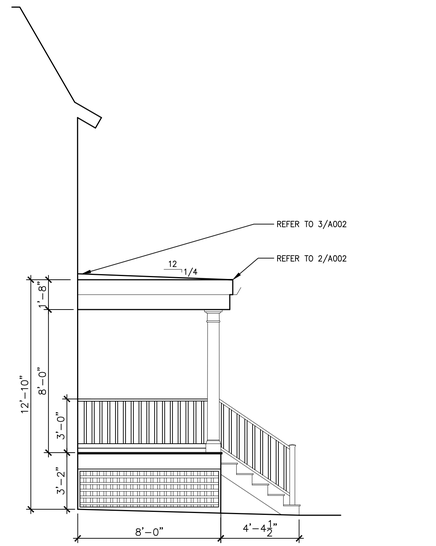

3/SIDE ELEVATION - NEW

SCALE: 1/4" = 1'-0"

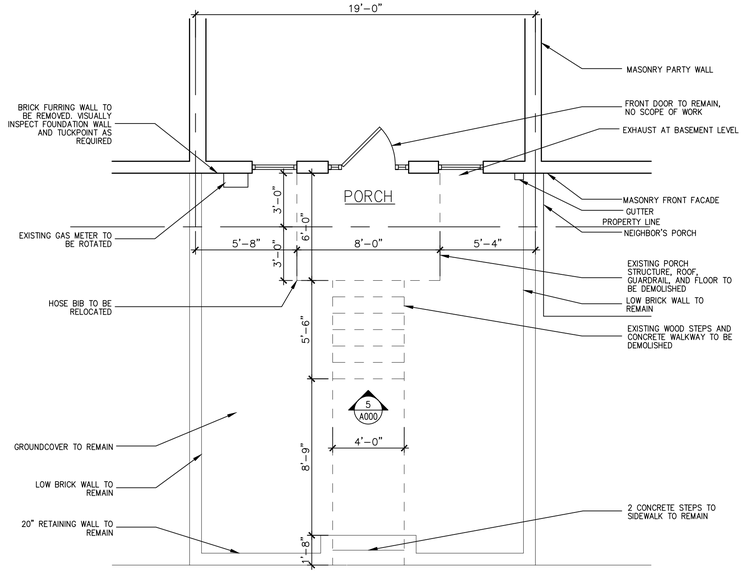

2/DEMO PLAN

SCALE: 1/4" = 1'-0"

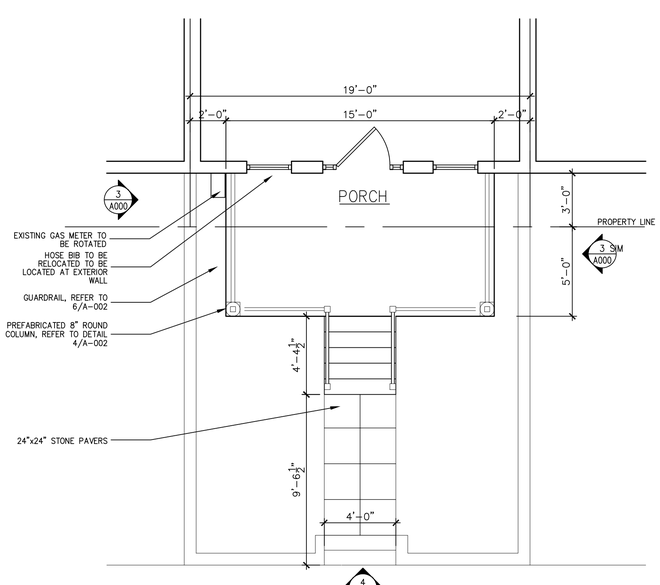

1/NEW PLAN

SCALE: 1/4" = 1'-0"

REVISIONS

DATE	DESCRIPTION

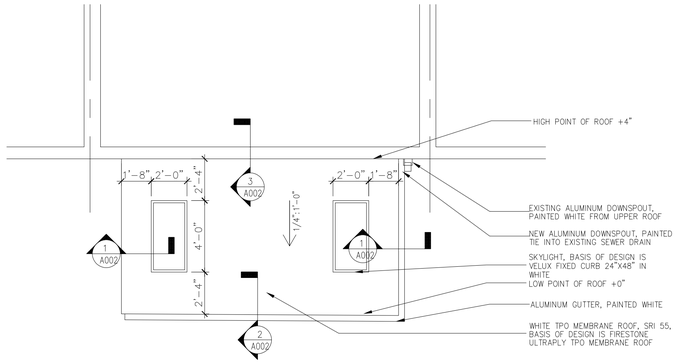

5/ROOF PLAN

SCALE: 1/4" = 1'-0"

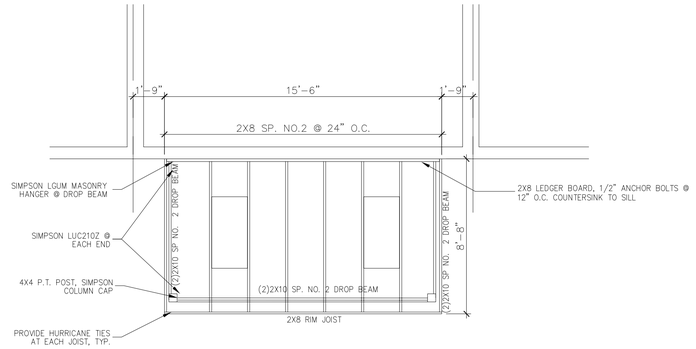

4/ROOF FRAMING PLAN

SCALE: 1/4" = 1'-0"

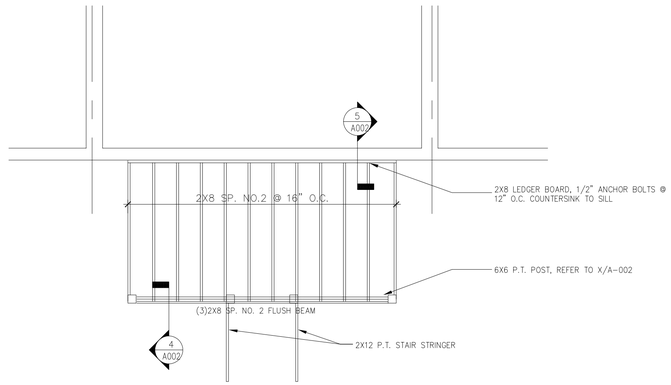

3/FLOOR FRAMING PLAN

SCALE: 1/4" = 1'-0"

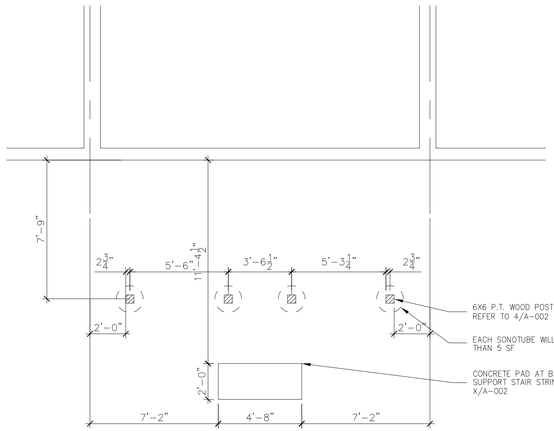

2/FOUNDATION PLAN

SCALE: 1/4" = 1'-0"

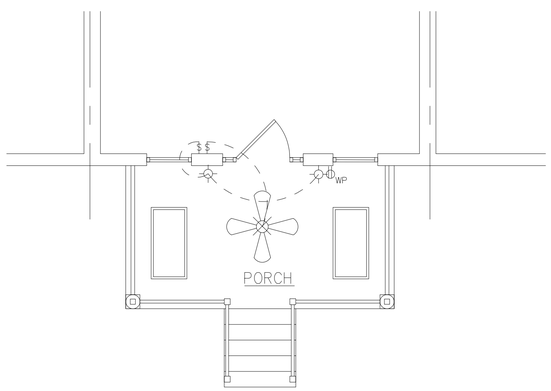

1/ELECTRICAL PLAN

SCALE: 1/4" = 1'-0"

REVISIONS	
DATE	DESCRIPTION
ISSUED:	06/12/2026

DISTRICT OF COLUMBIA
DEVON BROPHY
20099
LICENSED
ARCHITECT

ARCHITECT STAMP

34TH Street Architecture
34thstreetarchitecture.com
Devon@34thstreetarchitecture.com
908-566-2060

5332 41st Street NW
RESIDENCE

SPECIAL EXCEPTION APPLICATION
5332 41ST STREET NW
WASHINGTON, DC
20015

SHEET TITLE

STRUCTURAL & ELECTRICAL PLANS

SHEET NUMBER
A-001

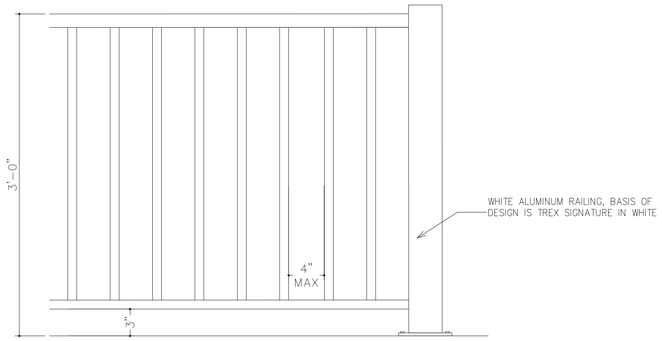

6/GUARDRAIL DETAIL

SCALE: 1 1/2" = 1'-0"

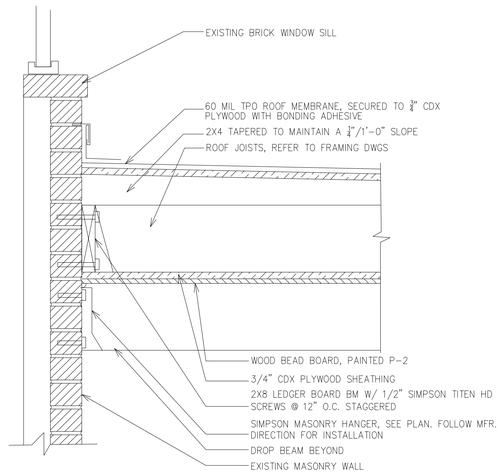

3/ROOF LEDGER DETAIL

SCALE: 1 1/2" = 1'-0"

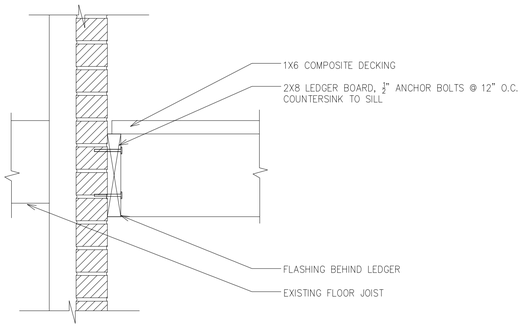

5/FLOOR LEDGER DETAIL

SCALE: 1 1/2" = 1'-0"

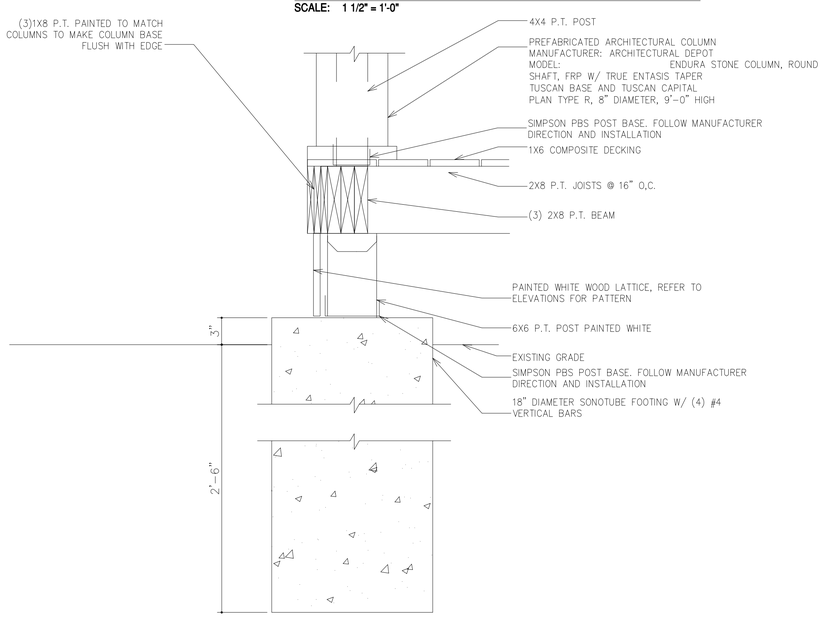

4/FOOTING DETAIL

SCALE: 1 1/2" = 1'-0"

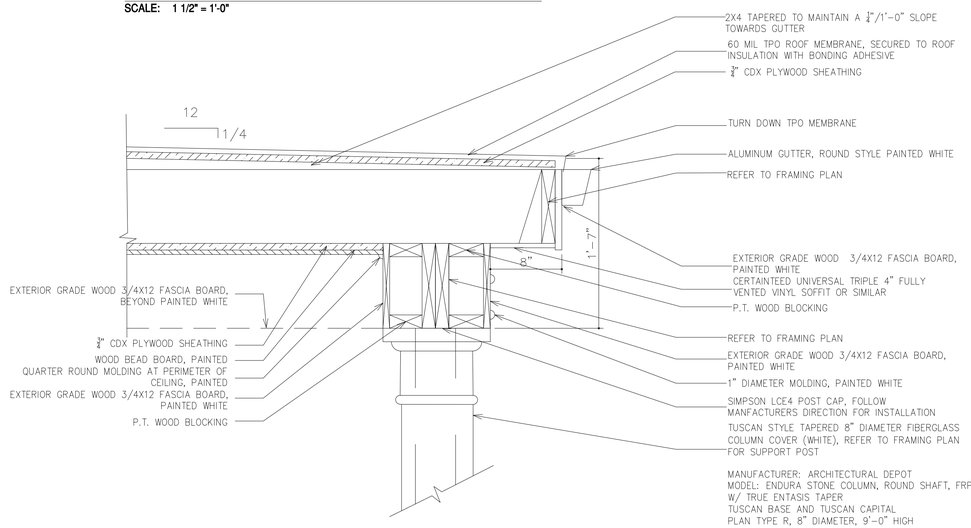

2/FRONT ROOF DETAIL

SCALE: 1 1/2" = 1'-0"

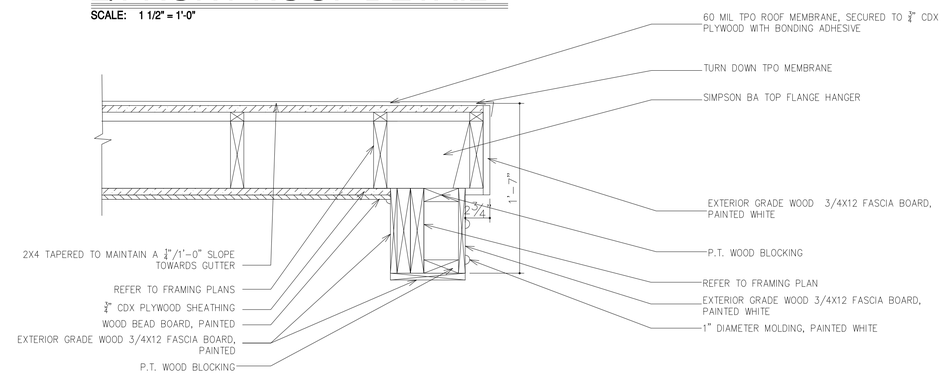

1/SIDE ROOF DETAIL

SCALE: 1 1/2" = 1'-0"

REVISIONS	
DATE	DESCRIPTION
ISSUED:	06/12/2026

DISTRICT OF COLUMBIA
DEVON BROPHY
201099
LICENSED
ARCHITECT

ARCHITECT STAMP

34TH Street Architecture
34thstreetarchitecture.com
Devon@34thstreetarchitecture.com
908-566-2060

5332 41st Street NW
RESIDENCE

SPECIAL EXCEPTION APPLICATION
5332 41ST STREET NW
WASHINGTON, DC
20015

SHEET TITLE

DETAILS

SHEET NUMBER
A-002