A13.1 - FINISH SCHEDULE						
MARK	DESCRIPTION	MANUFACTURER	STYLE	NUMBER	COLOR	REMARKS
VWB-1	VINYL WALL BASE	ROPPE		HC40LA5P161	WHITE	
VFT-1	VINYL FLOOR TILE	LL FLOORING	SUBTLE	VIS3MNA6	GRAY	WATER RESISTANT, WATERPROOF
IP-1	INTERIOR PAINT	SHERWIN WILLIAMS		A41W01351	WHITE	

NOTE:
ADA-COMPLIANT SLIDING WINDOW & TWO-WAY SERVICE WINDOW INTERCOM SYSTEM TO BE INSTALLED. EXTERIOR SUB STATION TO BE WEATHER-RESISTANT STAINLESS STEEL WITH INTEGRAL MICROPHONE, SPEAKER, AND CALL BUTTON. SEAL ALL EXTERIOR PENETRATIONS WEATHER-TIGHT.

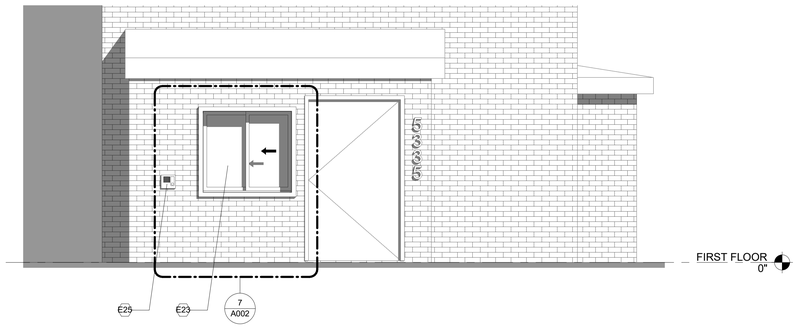

6 ELEVATION @ JEFFERSON STREET
3/8" = 1'-0"

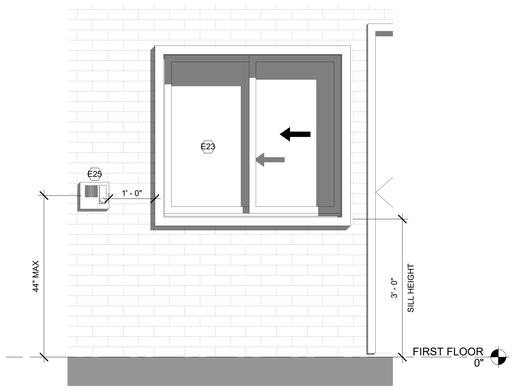

7 ENLARGED ELEVATION @ TWO-WAY INTERCOM & SERVICE WINDOW
3/4" = 1'-0"

INTERIOR FINISH REQUIREMENTS (IBC 2017 803.3)

USE GROUP	INTERIOR EXIT STAIRWAYS/RAMPS	EXIT ACCESS CORRIDORS	ROOMS AND ENCLOSED SPACES
A-2	CLASS A	CLASS A	CLASS C

CLASSIFICATION:
CLASS A: FLAME SPREAD 0-25
CLASS B: FLAME SPREAD 26-75
CLASS C: FLAME SPREAD 76-200

NOTES:
1. FINISHES TO BE AS SPECIFIED OR APPROVED EQUAL
2. FINISHES TO COMPLY WITH IBC TABLE 803.3
3. FLOOR & WALL TILES TO ALIGN. SUBMIT SAMPLES OF GROUT COLOR FOR OWNER'S APPROVAL. 3/16" JOINT, INSTALL PER MANUFACTURER'S RECOMMENDATIONS
4. SUBMIT SAMPLES OF ALL FINISHES FOR APPROVAL BY OWNER PRIOR TO ORDERING
5. PATCH & REPAIR ALL PUBLIC CORRIDOR FINISHES DISTURBED DURING CONSTRUCTION
6. REMOVE EXISTING FINISHES AS REQUIRED FOR INSTALLATION OF SPECIFIED FINISHES

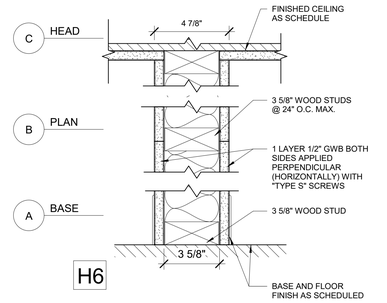

8 PARTITION DETAIL H6
3" = 1'-0"

EQUIPMENT SCHEDULE

E1	5 H.P. CORN GRINDER
E2	FLOOR MIXER - **AVANTCO - MODEL# MX40H**
E3	SINGLE DOOR REACH-IN FREEZER - **RANDELL - MODEL BC-918RI**
E4	WALL MOUNTED HAND SINK - **REGENCY**
E5	GRIDDLE - **CPG - MODEL GM-CPG-48-NL**
E6	TORTILLA MACHINE - **LENIN - MODEL MLR-30**
E7	BRAISING PAN / TILTING SKILLET - **CLEVELAND - MODEL SGL-40-TR**
E8	GAS HOT PLATE - **VULCAN - MODEL VHP424**
E9	PASTA SHEETER / EXTRUDER - **PASTABIZ - MODEL P2DVE**
E10	SPIRAL MIXER - **EURODIB - MODEL LRGM25B**
E11	REFRIGERATOR - **RANDELL - MODEL BC-18**
E12	SELF COOKER - **RATIONAL - MODEL 62 E**
E13	ICE MACHINE - **HOSHIZAKI - MODEL KM-320M_H**
E14	GNOCCHI - **PASTABIZ - MODEL GN2**
E15	MEAT SAW - **HOBART - MODEL 5614 SERIES**
E16	FOOD FORMING MACHINE - **GESAME - MODEL MH100AT**
E17	WALK-IN COOLER / FREEZER - **FAST TRAK**
E18	REFRIGERATOR - **AVANTCO - MODEL GDC-23-HC 28**
E19	HEATED CABINET - **AVANTCO - MODEL HEAT-1836I**
E20	REVERSIBLE DOUGH SHEETER - **ESTELLA - MODEL DSF94**
E21	3 COMPARTMENT SINK - **REGENCY**
E22	2 COMPARTMENT SINK - **STEELTON**
E23	WALK-UP SLIDING WINDOW - **READY ACCESS - MODEL 600**
E24	SERVICE WINDOW INTERCOM MASTER STATION - **AIPHONE - LEM-1DL**
E25	SERVICE WINDOW INTERCOM OUTDOOR STATION - **AIPHONE - LE-DA FLUSH MOUNT**

1 PROPOSED BASEMENT PLAN
1/4" = 1'-0"

2 PROPOSED FIRST FLOOR PLAN
1/4" = 1'-0"

4 PROPOSED SECOND FLOOR PLAN
1/4" = 1'-0"

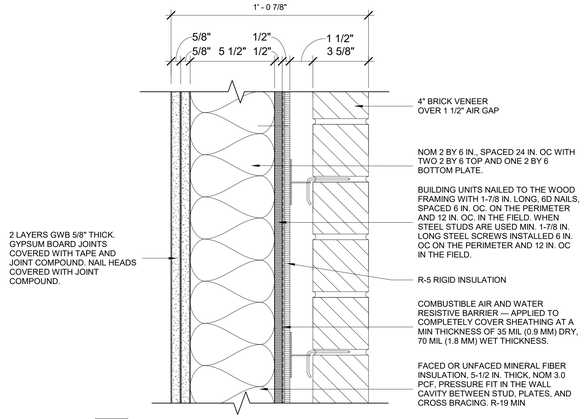

A

3 WALL TYPE A - #U348
3" = 1'-0"

5 ENLARGED PLAN @ TWO-WAY INTERCOM & SERVICE WINDOW
3/4" = 1'-0"

BENESTATE
ARCHITECTURE & REAL ESTATE CONSULTING
429 N STREET SW SUITE S109 WASHINGTON D.C. 20024
202.905.0889
WWW.BENESTATE.COM

RENOVATION

5335 GEORGIA AVE NW, WASHINGTON, D.C.

SUBMISSIONS /

NO.	DESCRIPTION	DATE

PRINCIPA	
SR. PROJ.	
PROJ.	

SEAL

DISTRICT OF COLUMBIA
CORRECTION WORKING
No. PE6864
REGISTERED
PROFESSIONAL ENGINEER

JOB	XXXXX

PROPOSED PLANS

A002

Application of Adjustment
Case No. 21506
EXHIBIT NO. 21

2/23/2026 4:09:27 PM

BENESTATE LLC does not warrant or guaranty the validity and or accuracy of this sheet except for the party and use for which it was originally created.

The contents of this drawing are the property of BENESTATE LLC unless an agreement to the contrary has been previously negotiated with the project owner.