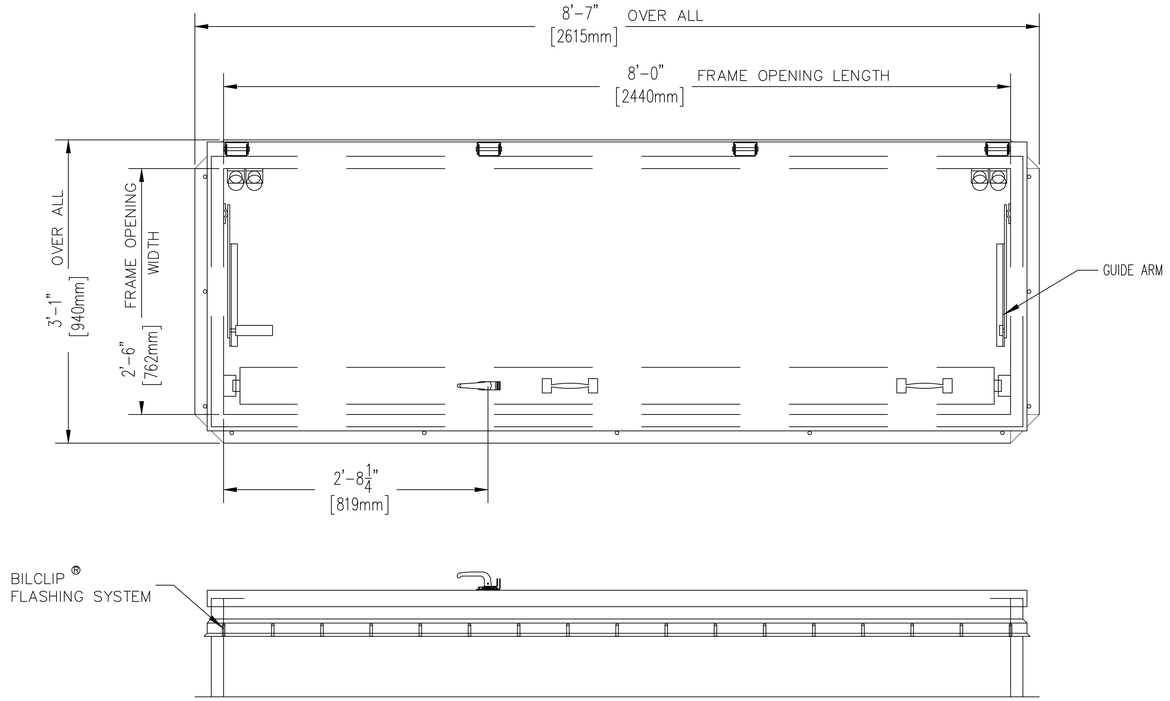

ROOF HATCH PLAN

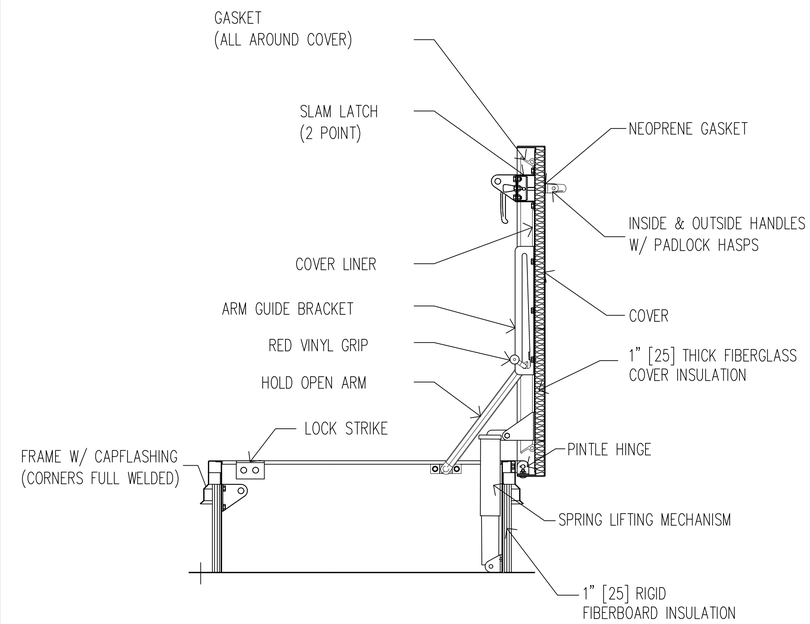

SECTION

ROOF HATCH SECTION

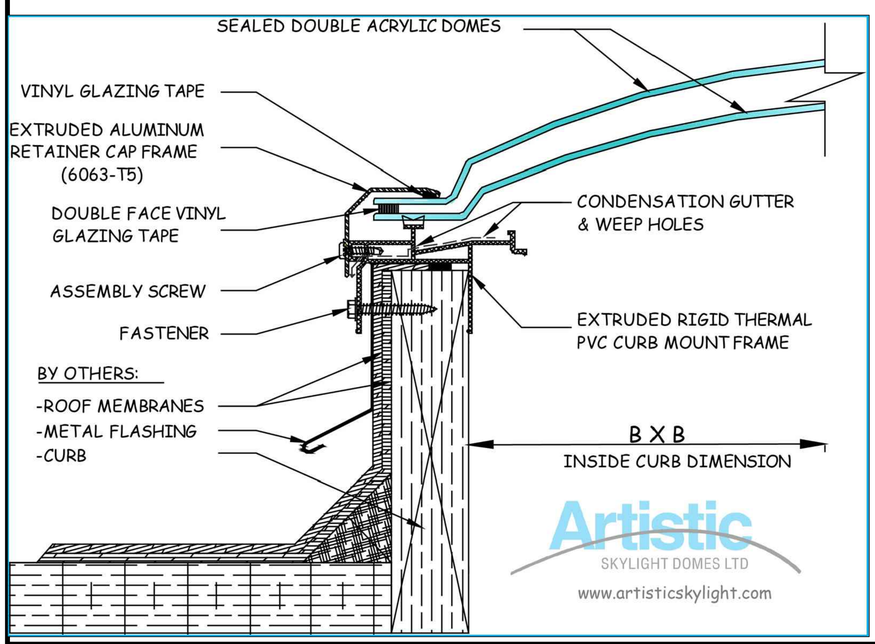

TYPICAL FLASHING DETAILS

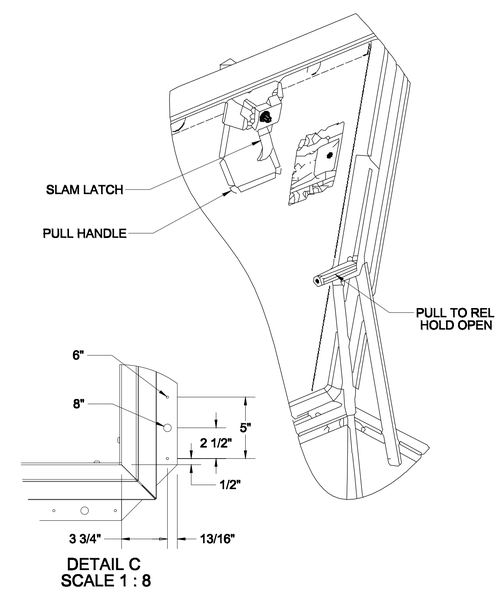

DETAIL C
SCALE 1 : 8

HINGE DETAILS

Client/Project

ALEXANDER-BENONS LLC
INTERIOR RENOVATION
1206 STAPLES ST NE
WASHINGTON, D.C 20002

Consultants

K.T. BROOKINS

Brookins Architectural Services Inc.
1 Hard Spring Ct.
Owings Mills, MD 21117

Consultants

Revision	Date	Remarks
4	3/26/25	BZA ZONING REVIEW

Drawing Title

ROOF HATCH DETAILS

Seal	Date	Check By
	12-20-23	EG
	Scale N.T.S	Drawn By KTB
	Sheet Number	
	A.402	

Board of Zoning Adjustment
District of Columbia
CASE NO.21226
EXHIBIT NO.42C