1 A1.00 SITE PLAN
SCALE:1/8" = 1'-0"

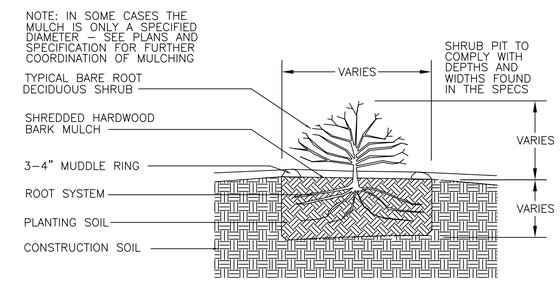

BARE ROOT PLANTING DETAIL
N.T.S.

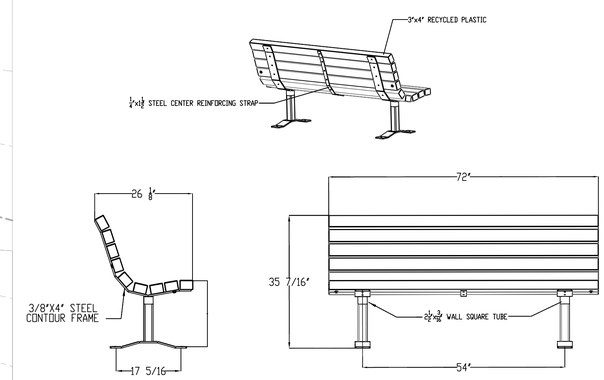

BENCH DETAIL
N.T.S.

WAYNE PLACE APARTMENTS
CHRISTOPHER MAK
113 WAYNE PLACE SE, WASHINGTON, DC.

no.	description	date
	Sheet Revisions	

no.	description	date
	Project Issues	

design and construction documents as instruments of service are given in confidence and remain the property of robinson design group llc. the use of this design and these construction documents for purposes other than those specified in connection with this project is strictly prohibited without expressed written consent of robinson design group llc.

sheet name:
SITE PLAN

drawn by:
TR

checked by:
TR

sheet number:
A1.00

job number:
Project Number

Board of Zoning Adjustment
CASE NO.21164
EXHIBIT NO.27