GOVERNMENT OF THE DISTRICT OF COLUMBIA
PERMIT OPERATIONS DIVISION
PLANS APPROVED
Permit No. BCIV2300110 Date 11/16/23

These plans are conditionally approved as submitted or noted during plan review and are subject to field inspection. Approved plans must be kept on site and are needed for all inspections. No changes or modifications to these plans. Changes require a revision permit with the revised plans. Trade Permits are required for trade work, e.g. Electrical or Plumbing

Structural Review - Glenn Kechejian - 11-16-2023
DOOT Review - Shawntanisha Zackery - 11-16-2023
DOEE SE-SW Review - Saba Gharavi - 11-16-2023
HPRB Review - Timothy Dentee - 11-16-2023
DC Water Review - Vahid Bihardi - 11-16-2023

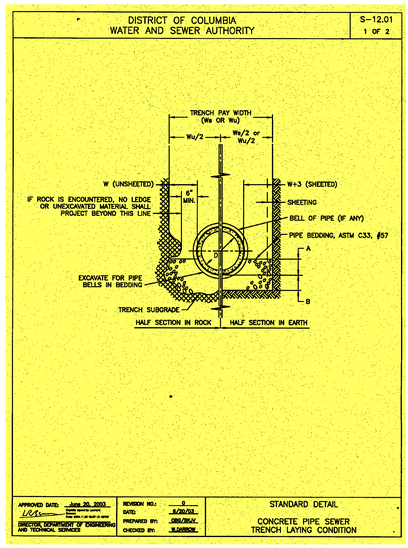

1 CIV0900 CONCRETE SEWER TRENCH/CRADLE DETAIL
NOT TO SCALE

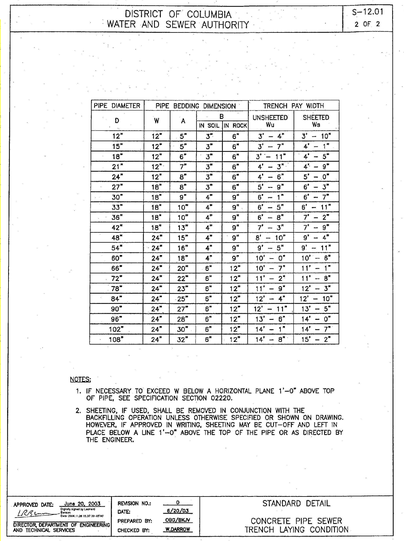

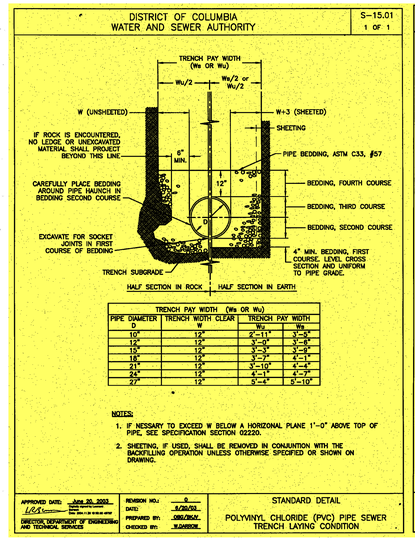

2 CIV0900 PVC SEWER TRENCH/CRADLE DETAIL
NOT TO SCALE

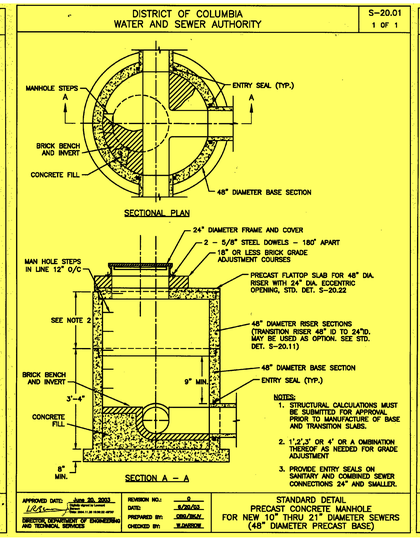

3 CIV0900 48" PRECAST CONCRETE MANHOLE DETAIL
NOT TO SCALE

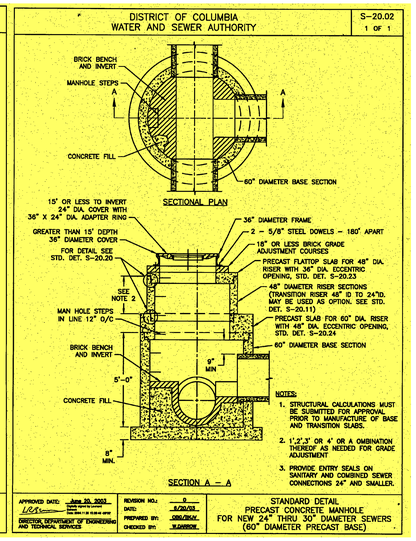

4 CIV0900 60" PRECAST CONCRETE MANHOLE DETAIL
NOT TO SCALE

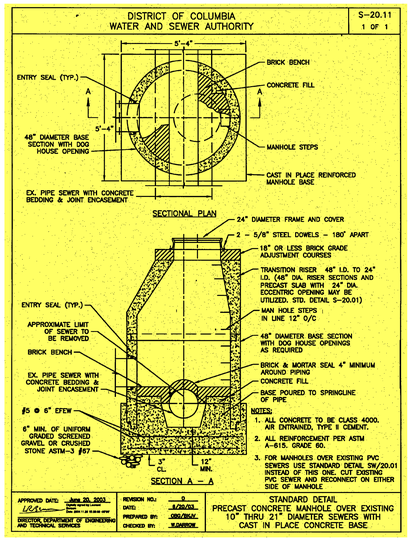

5 CIV0900 48" PRECAST CONCRETE DOGHOUSE MANHOLE
NOT TO SCALE

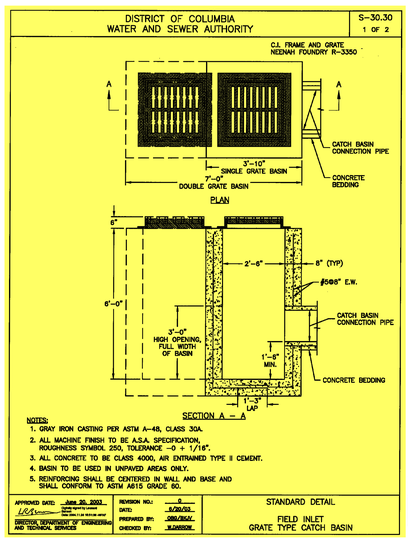

6 CIV0900 GRATE CATCH BASIN
NOT TO SCALE

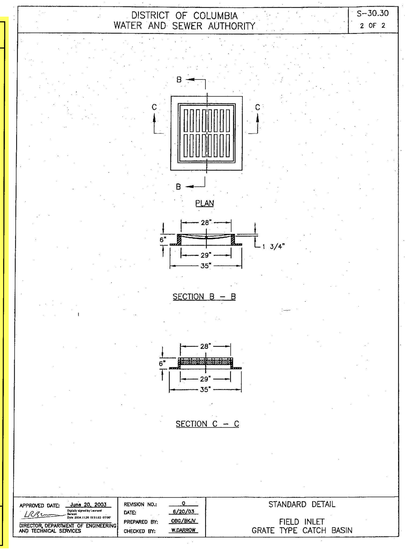

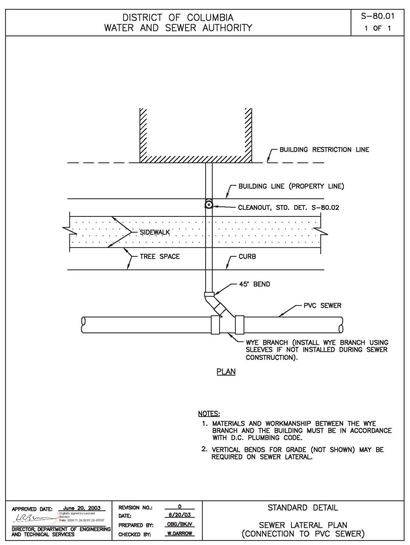

7 CIV0900 WYE BRANCH CONNECTION DETAIL
NOT TO SCALE

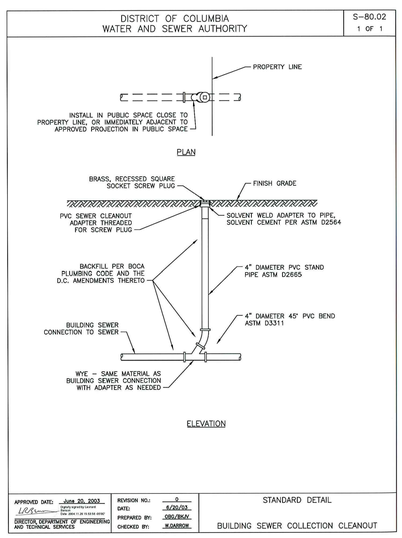

8 CIV0900 CLEANOUT DETAIL
NOT TO SCALE

VIKA CAPITOL
ENGINEERS ★ PLANNERS ★ LANDSCAPE ARCHITECTS ★ SURVEYORS ★ SUSTAINABILITY
PROJECT COORDINATOR: BRIAN RUHL ruhl@vikacapitol.com
VIKA CAPITOL, LLC ★ 4910 MASSACHUSETTS AVENUE, NW SUITE 16 ★ WASHINGTON, DC 20016 ★ PHONE: 202.244.4140
★ W W W . V I K A C A P I T O L . C O M

MARET SCHOOL
PROPOSED ATHLETIC FIELDS
SQUARE 2319, LOT 832
5901 UTAH AVE NW
WASHINGTON, D.C. 20015

SITE DETAILS

VIKA CAPITOL REVISIONS

#	DATE	DESCRIPTION

**NOTE
THE INFORMATION, DESIGN AND CONTENT OF THE DRAWINGS OR DOCUMENTS ATTACHED HERETO ARE PROPRIETARY TO VIKA CAPITOL, LLC AND CONSTITUTE ITS PROPRIETARY INTELLECTUAL PROPERTY. THE ATTACHED DRAWINGS AND/OR DOCUMENTS, OR ANY PART, MAY BE FORWARDED, SHARED, COPIED, DIGITALLY CONVERTED, MODIFIED, OR USED FOR ANY PURPOSE, IN ANY FORMAT, WITHOUT PRIOR WRITTEN AUTHORIZATION FROM VIKA CAPITOL, LLC. VIOLATIONS MAY RESULT IN PROSECUTION. ONLY APPROVED, SIGNED AND SEALED PLANS OR DRAWINGS MAY BE UTILIZED FOR CONSTRUCTION PURPOSES.

DISTRICT OF COLUMBIA ★ KYLE U. OLIVER ★ #PE900770 ★ 3/17/2023 ★ CIVIL ★ PROFESSIONAL ENGINEER

DATE: 23-FEB-2023
DES. KUO DWN. BJR
SCALE: AS SHOWN
PROJECT/FILE NO. VC0626D
SHEET NO. CIV0900

Board of Zoning Adjustment
District of Columbia
CASE NUMBER 21-100
EXHIBIT NO. 21-100

S:\0001-1000\0626D - 5901 Utah Ave. NW - Final Eng\Used\construction documents\VC0626D_900.dwg - Mar 29, 2023 AT 12:26:28 PM

LAYOUT: CIV0900 SITE DETS, Plotted By: merkel