GOVERNMENT OF THE DISTRICT OF COLUMBIA
PERMIT OPERATIONS DIVISION
PLANS APPROVED
Permit No. BCIV2300110 Date 11/16/23

These plans are conditionally approved as submitted or noted during plan review and are subject to field inspection. Approved plans must be kept on site and are needed for all inspections. No changes or modifications to these plans. Changes require a revision permit with the revised plans. Trade Permits are required for trade work e.g. Electrical or Plumbing

Structural Review - Glenn Kechejian - 11-16-2023
DOOT Review - Shawntanisha Zackery - 11-16-2023
DOEE SE-SW Review - Saba Gharavi - 11-16-2023
HPRB Review - Timothy Dennee - 11-16-2023
DC Water Review - Vahid Bihardi - 11-16-2023

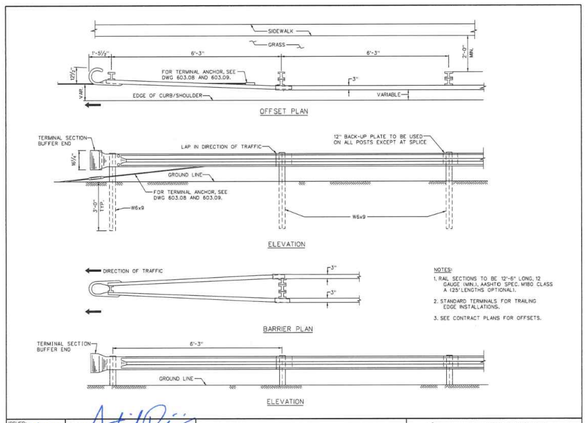

ISSUED: 8/2015 RECOMMENDED: PROJECT MANAGER APPROVED: CHIEF ENGINEER
W-BEAM GUARDRAIL TRAILING END TERMINAL
d. DISTRICT OF COLUMBIA DEPARTMENT OF TRANSPORTATION
DWG. NO. 603.01

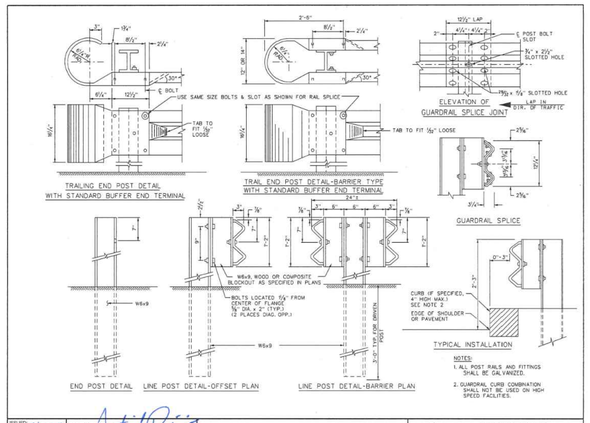

ISSUED: 8/2015 RECOMMENDED: PROJECT MANAGER APPROVED: CHIEF ENGINEER
W-BEAM GUARDRAIL DETAILS - 1
d. DISTRICT OF COLUMBIA DEPARTMENT OF TRANSPORTATION
DWG. NO. 603.02

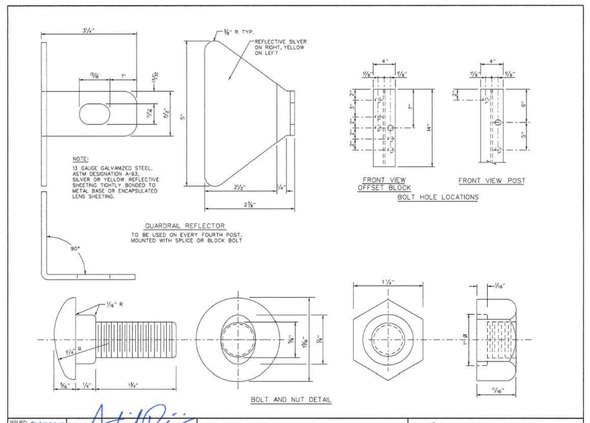

ISSUED: 8/2015 RECOMMENDED: PROJECT MANAGER APPROVED: CHIEF ENGINEER
W-BEAM GUARDRAIL DETAILS - 2
d. DISTRICT OF COLUMBIA DEPARTMENT OF TRANSPORTATION
DWG. NO. 603.03

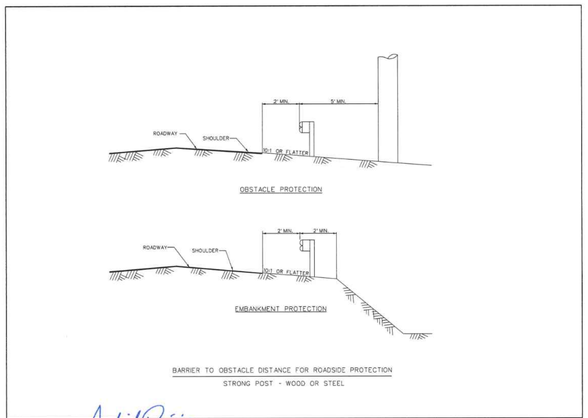

ISSUED: 8/2015 RECOMMENDED: PROJECT MANAGER APPROVED: CHIEF ENGINEER
BARRIER TO OBSTACLE DISTANCE
d. DISTRICT OF COLUMBIA DEPARTMENT OF TRANSPORTATION
DWG. NO. 603.04

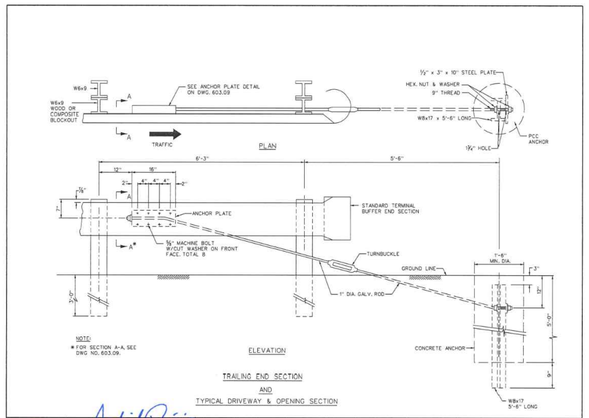

ISSUED: 8/2015 RECOMMENDED: PROJECT MANAGER APPROVED: CHIEF ENGINEER
W-BEAM TRAILING TERMINAL SECTION ANCHOR
d. DISTRICT OF COLUMBIA DEPARTMENT OF TRANSPORTATION
DWG. NO. 603.08

NOTES

- CONTRACTOR SHALL SUBMIT SHOP DRAWINGS FOR REVIEW AND APPROVAL PRIOR TO ORDERING, OR INSTALLATION OF VEHICULAR GUARD RAIL

1 CIV0945 VEHICULAR GUARD RAIL DETAILS
NOT TO SCALE

VIKA CAPITOL
ENGINEERS ★ PLANNERS ★ LANDSCAPE ARCHITECTS ★ SURVEYORS
PROJECT COORDINATOR: BRIAN RUHL ruhl@vikacapitol.com
★ VIKA CAPITOL, LLC ★ 4910 MASSACHUSETTS AVENUE, NW SUITE 16 ★ WASHINGTON, DC 20016 ★ PHONE: 202.244.4140 ★
★ W W W . V I K A C A P I T O L . C O M ★

MARET SCHOOL
PROPOSED ATHLETIC FIELDS
SQUARE 2319, LOT 832
5901 UTAH AVE. NW
WASHINGTON, D.C. 20015

SITE DETAILS

VIKA CAPITOL REVISIONS

#	DATE	DESCRIPTION

**NOTE
THE INFORMATION, DESIGN AND CONTENT OF THE DRAWINGS OR DOCUMENTS ATTACHED HERETO ARE PROPRIETARY TO VIKA CAPITOL, LLC AND CONSTITUTE ITS PROPRIETARY INTELLECTUAL PROPERTY. THE ATTACHED DRAWINGS OR THE DOCUMENTS MAY NOT BE REPRODUCED, SHARED, COPIED, DIGITALLY CONVERTED, MODIFIED, OR USED FOR ANY PURPOSE, IN ANY FORMAT, WITHOUT PRIOR WRITTEN AUTHORIZATION FROM VIKA CAPITOL, LLC. VIOLATIONS MAY RESULT IN PROSECUTION. ONLY APPROVED, SIGNED AND SEALED PLANS OR DRAWINGS MAY BE UTILIZED FOR CONSTRUCTION PURPOSES.

DISTRICT OF COLUMBIA ★ KYLE U. OLIVER ★ #PE900770 ★ 3/17/2023 ★ CIVIL ★ PROFESSIONAL ENGINEER

DATE: 23-FEB-2023
DES. KUO DWN. BJR
SCALE: AS SHOWN
PROJECT/FILE NO. VC0626D
SHEET NO. Board of Zoning Adjustment District of Columbia CIV0945 of 01100 01100

S:\0001-1000\0626D - 5901 Utah Ave. NW - Final Eng\cad\construction documents\VC0626D_IC00.dwg, ~ Mar 29, 2023 AT 12:30:19 PM

LAYOUT: CIV0945-SITE DETS, Plotted By: merkel